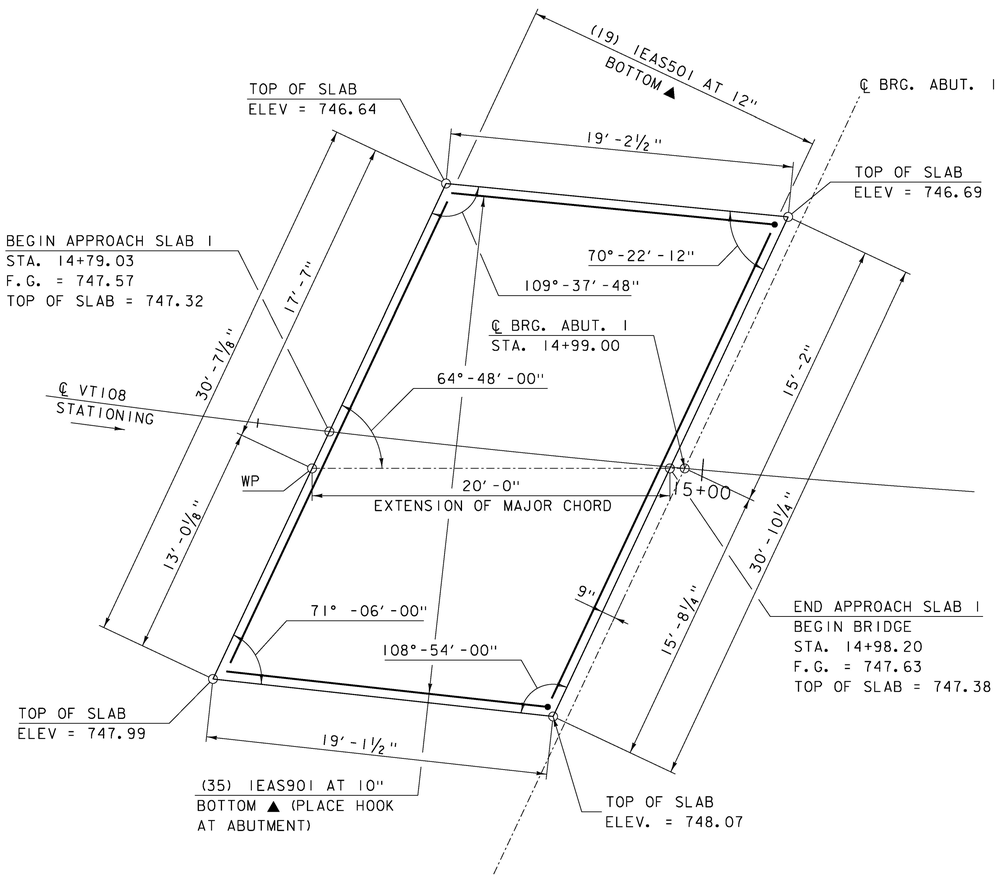

APPROACH SLAB 1LAYOUT

SCALE: ¼" = 1'-0"

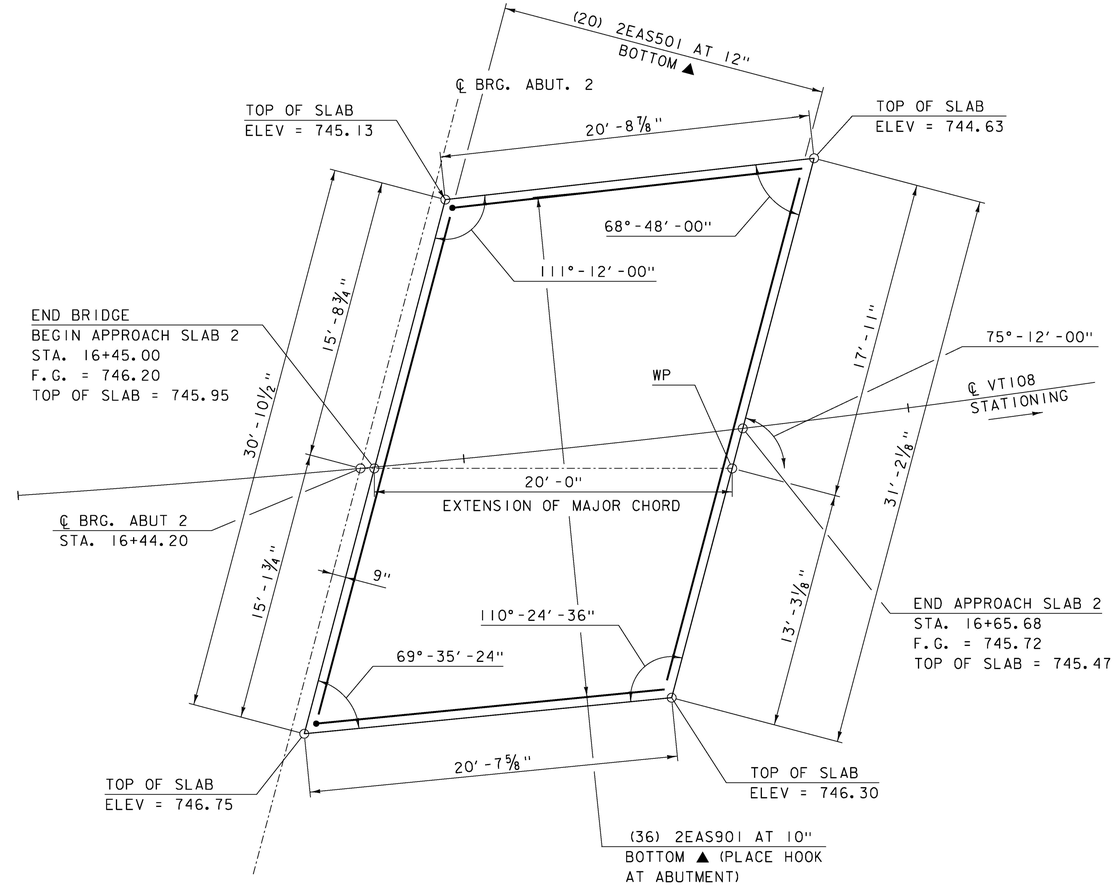

APPROACH SLAB 2 LAYOUT

SCALE: ¼" = 1'-0"

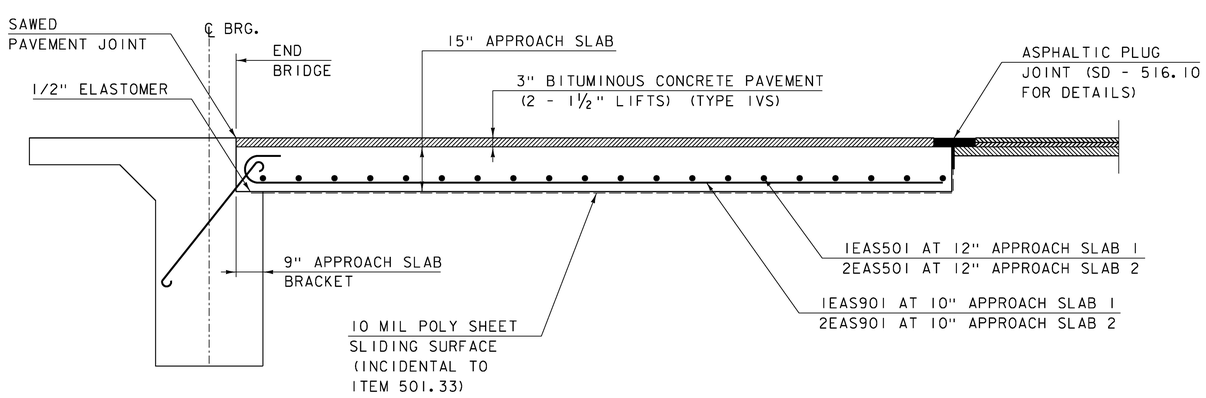

TYPICAL APPROACH SLAB

SCALE: ½" = 1'-0"

PROJECT NAME: STOWE	
PROJECT NUMBER: BRF 0235(15)	
FILE NAME: z88cl90sup.dgn	PLOT DATE: 5/8/2015
PROJECT LEADER: J. BYATT	DRAWN BY: M. SMITH
DESIGNED BY: J. FRENCH	CHECKED BY: J. BYATT
APPROACH SLAB DETAILS	SHEET 50 OF 79

CONSULTING ENGINEERS

CLD 12-0120 MODEL: Approach Slab