NOTE:

SEE PROJECT NOTES FOR ADDITIONAL FABRICATION, CONSTRUCTION, AND SEQUENCE NOTES.

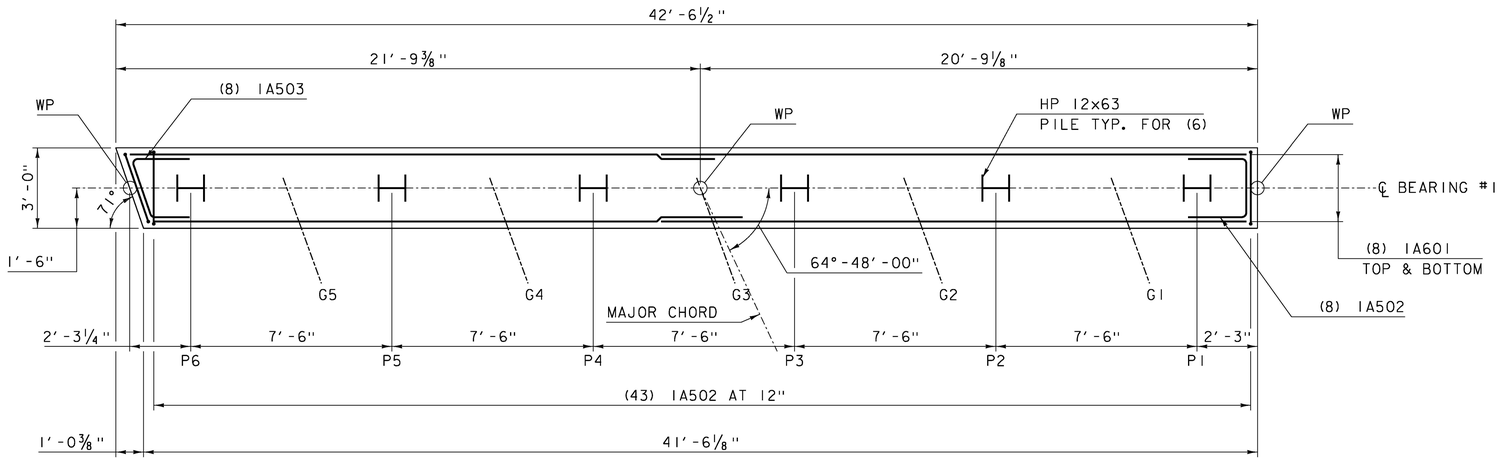

ABUTMENT #1 PILE CAP PLAN

SCALE: ⅜" = 1'-0"

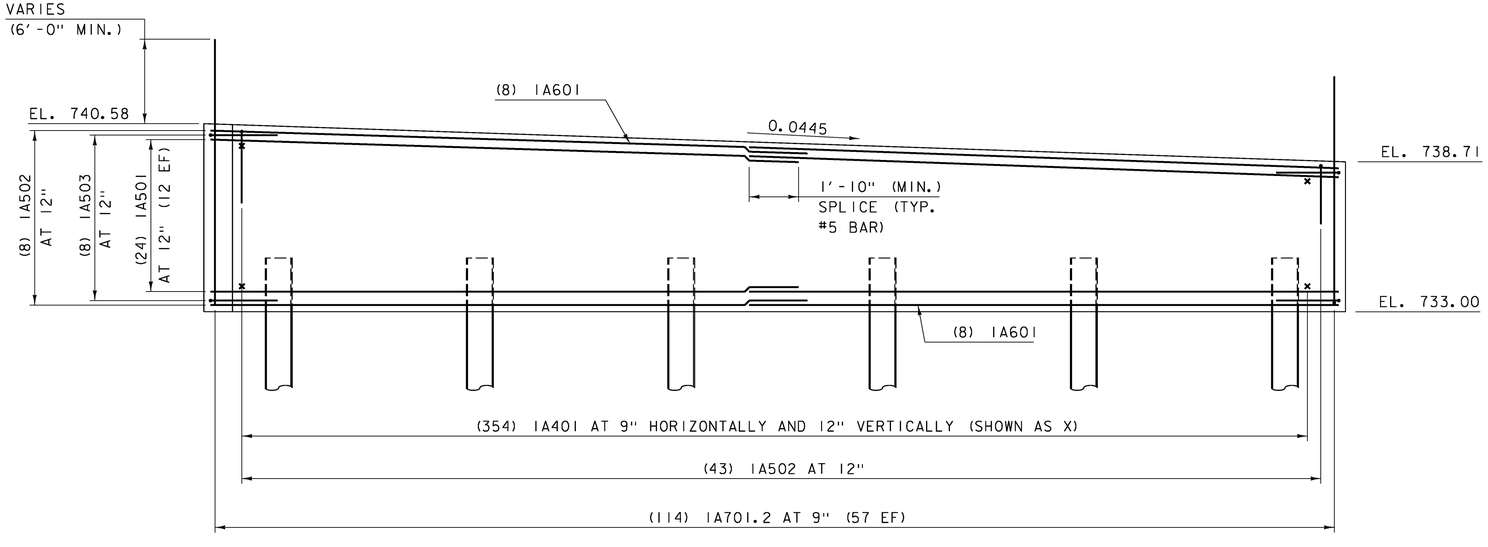

ABUTMENT #1 PILE CAP ELEVATION

SCALE: ⅜" = 1'-0"

NOTE:

NF = NEAR FACE
FF = FAR FACE
EF = EACH FACE
▲ = CUT TO FIT IN FIELD
3" CLEAR, UNLESS OTHERWISE SPECIFIED ON THE PLANS.
2' - 2" BAR LAP UNLESS OTHERWISE SPECIFIED ON THE PLANS
X = LATERAL TIE

PROJECT NAME: STOWE	
PROJECT NUMBER: BRF 0235(15)	
FILE NAME: z88c190sub.dgn	PLOT DATE: 5/8/2015
PROJECT LEADER: J. BYATT	DRAWN BY: M. SMITH
DESIGNED BY: J. FRENCH	CHECKED BY: J. BYATT
ABUTMENT 1 PILE CAP PLAN AND ELEVATION	SHEET 44 OF 79

CLD 12-0120 MODEL: PILE CAP 1