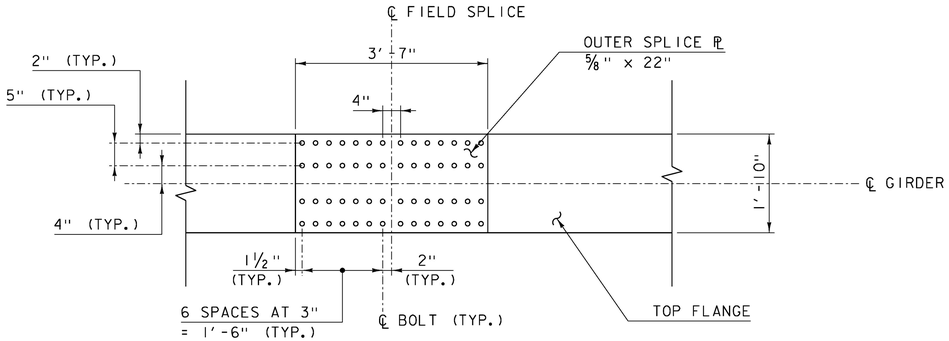

TOP FLANGE

SCALE: 3/4" = 1'-0"

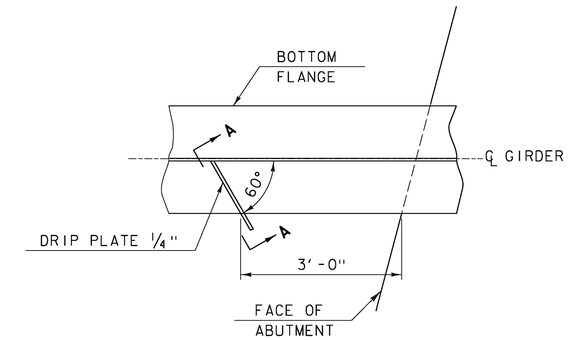

PLAN DRIP PLATE

SCALE: 3/4" = 1'-0"

NOTE: DRIP PLATES SHALL BE PLACED ON OUTSIDE EDGE OF FASCIA GIRDERS AS INDICATED ON PROJECT PLANS.

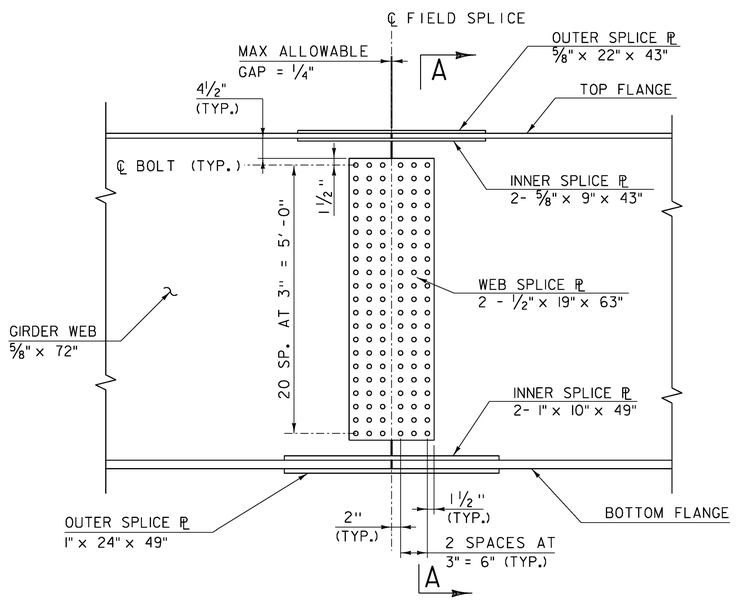

WEB SPLICE

SCALE: 3/4" = 1'-0"

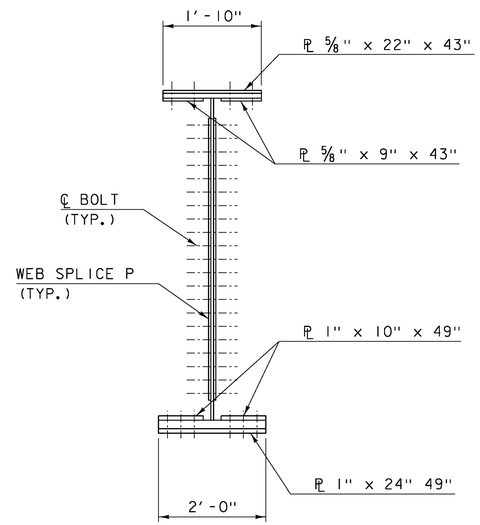

SECTION A-A

SCALE: 3/4" = 1'-0"

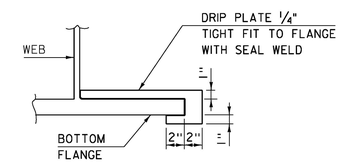

SECTION A-A

SCALE: 1 1/2" = 1'-0"

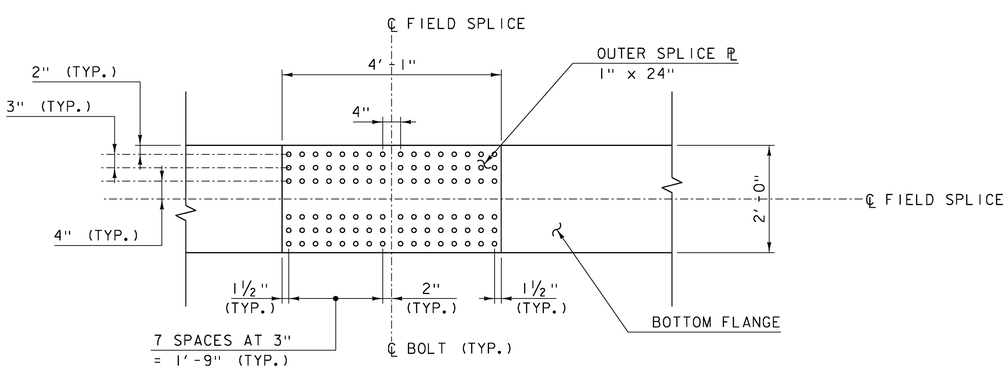

BOTTOM FLANGE

SCALE: 3/4" = 1'-0"

NOTE: BOLTED FIELD SPLICE IS OPTIONAL AND SHALL BE INCIDENTAL TO ITEM 506.56. IF THE BOLTED FIELD SPLICE IS OMITTED THE GIRDER SHALL BE PROVIDED IN ONE CONTINUOUS LENGTH.

PROJECT NAME: STOWE	
PROJECT NUMBER: BRF 0235(15)	
FILE NAME: z88cl90sup.dgn	PLOT DATE: 5/13/2015
PROJECT LEADER: J. BYATT	DRAWN BY: M. SMITH
DESIGNED BY: J. FRENCH	CHECKED BY: J. BYATT
SPLICE DETAILS	SHEET 39 OF 79

CLD CONSULTING ENGINEERS

MODEL: Splice Details

CLD 12-0120