NOTES FOR UTILITY HOLE/DUCTBANK SECTION:

1. DEPTH MINIMUM 12", MAXIMUM 18" BELOW GRADE, EXCEPT AS NEEDED TO ACCOMMODATE STREET SUBBASE.
2. UTILITY HOLE SHALL BE ORIENTED SUCH THAT 40" DIA RING AND COVER IS LOCATED FULLY WITHIN SIDEWALK OR PAVEMENT, UNLESS OTHERWISE NOTED. CONTRACTOR SHALL BE RESPONSIBLE FOR VERIFYING LOCATION OF UTILITY HOLE PRIOR TO FORMING TOP SO THAT OPENING IS IN SIDEWALK.
3. NO OTHER UTILITIES SHALL PASS ABOVE VAULT.
4. THROAT SHALL BE CAST-IN-PLACE CONCRETE SECTIONS (2" MIN) FROM UTILITY HOLE TO RING: SEE SECTION B-B. COORDINATE EXACT HEIGHT BASED ON FINISHED GRADE. SET RING WITH FINAL SIDEWALK OR ASPHALT SETTING. PROVIDE MASTIC SEAL BETWEEN ALL SECTIONS. MORTER SECTIONS TOGETHER.

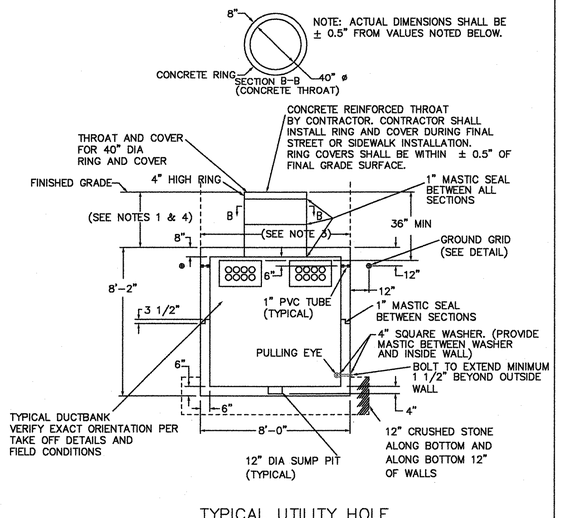

TYPICAL UTILITY HOLE ELEVATION

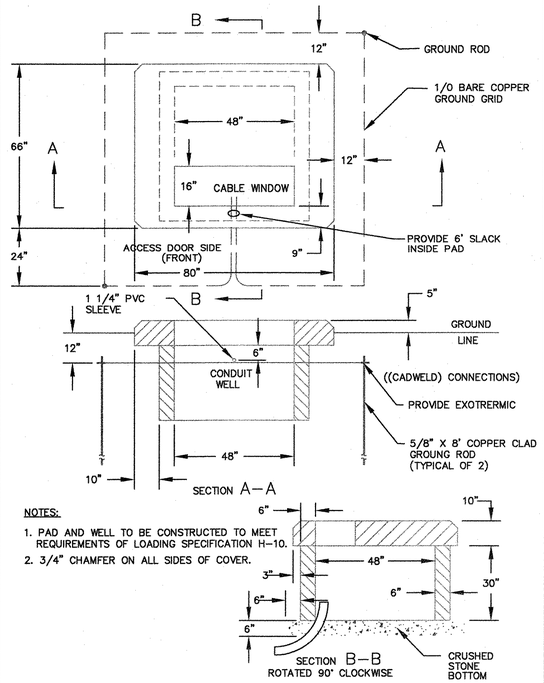

THREE ø TRANSFORMER PAD

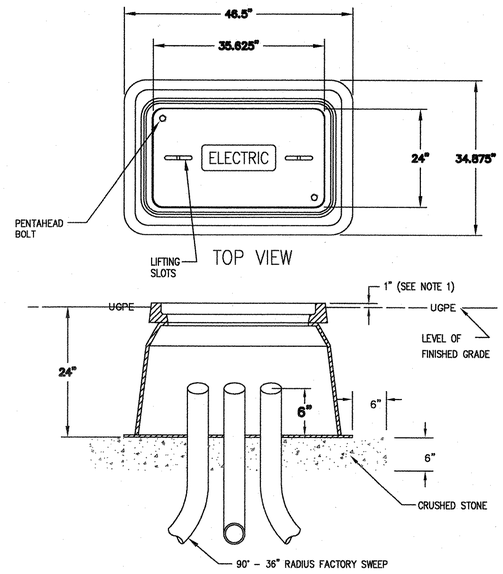

NOTES

1. FOR HANDHOLES SET IN SIDEWALKS AND PAVED AREAS, TOP OF HAND HOLE SHALL BE FLUSH WITH GRADE.
2. HANDHOLE MODEL NUMBER: CDR SYSTEMS CORPORATION PA12-2436-24. NO SUBSTITUTES.

SMALL HAND HOLE (SHH) INSTALLATION

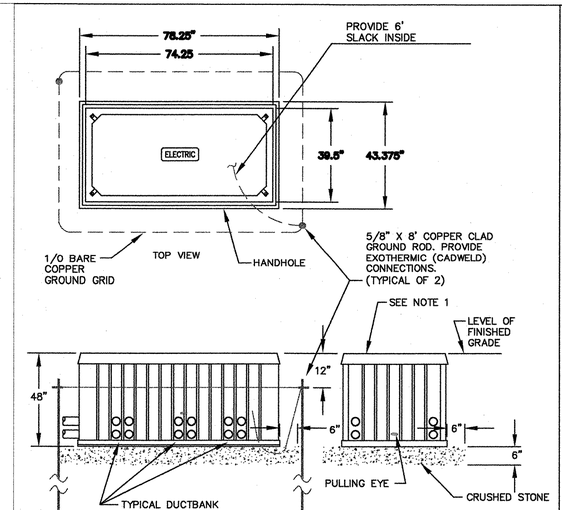

NOTES:
1. WHEN BOX IS INSTALLED IN GRASS, TOP OF BOX SHALL BE ONE INCH ABOVE FINISHED GRADE; WHEN BOX IS INSTALLED IN SIDEWALK, TOP OF BOX SHALL BE FLUSH WITH FINISHED GRADE.
2. (4) 4" DUCTS TO PENETRATE NEAR ENDS OF WALL. WHERE ADDITIONAL (4) 4" NEEDED, PENETRATE AT MIDDLE OF WALL.
3. HANDHOLE MODEL NUMBER: CDR SYSTEMS CORPORATION SEE DETAIL BELOW.

LARGE HANDHOLE (HH) INSTALLATION

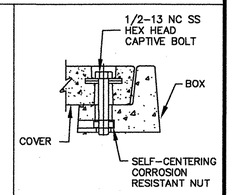

BOLTDOWN DETAIL

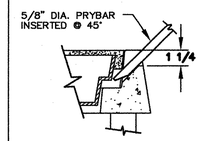

PRYBAR DETAIL

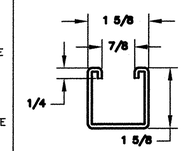

UNISTRUT DETAIL

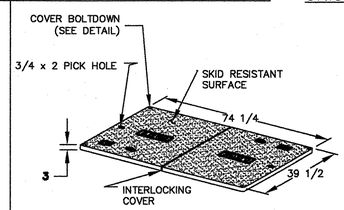

TWO PIECE COVER

NOTE: COVERS TO BE "EHD"

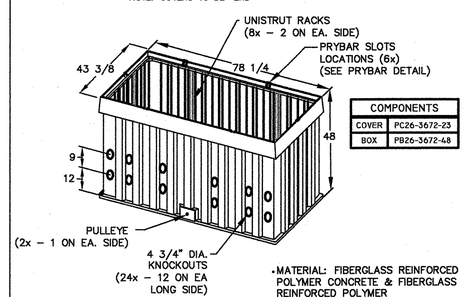

COMPONENTS	
COVER	PC26-3672-23
BOX	PB26-3672-48

- MATERIAL: FIBERGLASS REINFORCED POLYMER CONCRETE & FIBERGLASS REINFORCED POLYMER
- COLOR: CONCRETE GRAY
- LOAD RATING: A16 (ASTM C857)
- LOGO: ELECTRIC

BOX

LARGE HANDHOLE (HH) DETAIL

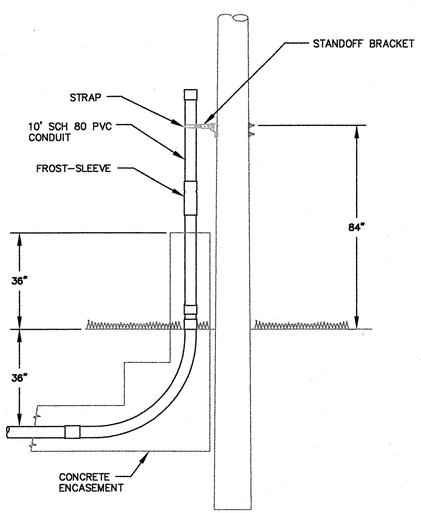

NOTES:

1. POLES (N) BELD #1, #2 AND #1501 LOCATED AT INTERSECTION OF RIVERSIDE AVE., INTERVALE AVE. AND N. PROSPECT ST.; #3, #4 NEAR SALMON RUN.
2. CONTRACTOR SHALL PROVIDE NEMA APPROVED PVC SCHEDULE 80. CONDUIT ABOVE GRADE.
3. ATTACH CONDUIT ON SIDE OF POLE AWAY FROM TRAFFIC WHEN POSSIBLE.
4. B.E.D. SHALL INSTALL STANDOFF BRACKET AND STRAP.
5. CONTRACTOR SHALL PROVIDE FROST-SLEEVE (CARLON E945 OR EQUIVALENT).
6. PROVIDE CONCRETE ENCASEMENT 36" ABOVE FINISHED GRADE AS SHOWN. LOCATE 4" ENVELOPE AROUND CONDUITS.

TYPICAL ENCASED ELECTRICAL RISER INSTALLATION AT (N) BELD #1 THRU 4 AND #1501 POLES

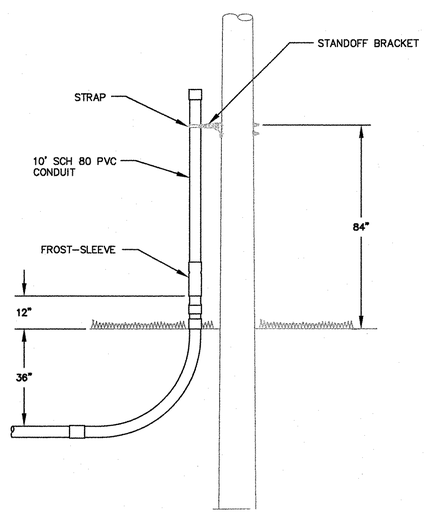

NOTES:

1. DETAIL ROR ALL POLES EXCEPT (N) BELD #1501, #1796 AND #2590. INTERVALE AVE. AND N. PROSPECT ST.
2. CONTRACTOR SHALL PROVIDE NEMA APPROVED PVC SCHEDULE 80. CONDUIT ABOVE GRADE.
3. ATTACH CONDUIT ON SIDE OF POLE AWAY FROM TRAFFIC WHEN POSSIBLE.
4. B.E.D. SHALL INSTALL STANDOFF BRACKET AND STRAP.
5. CONTRACROR SHALL PROVIDE FROST-SLEEVE (CARLON E945 OR EQUIVALENT).
6. PROVIDE CONCRETE ENCASEMENT 36" ABOVE FINISHED GRADE AS SHOWN. LOCATE 4" ENVELOPE AROUND CONDUITS.

TYPICAL NON-ENCASED ELECTRICAL RISER INSTALLATION

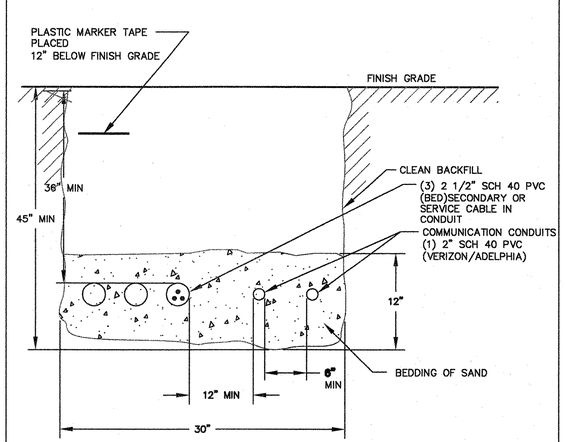

NOTES:

1. IN SOME CASES, DEPTHS MAY BE REDUCED IF ENCASED IN 4" OF CONCRETE.
2. WHERE LEDGE IS ENCOUNTERED, MINIMUM DEPTHS MAY BE REDUCED TO 18" WHEN CONDUIT ENCASED IN 4" OF CONCRETE.
3. MOUNDING THE TRENCH TO GAIN SUITABLE CABLE DEPTH IS NOT PERMITTED.
4. VERIFY CONDUITS WITH SITEPLAN DRAWINGS.

TYPICAL TRENCH FOR SERVICES

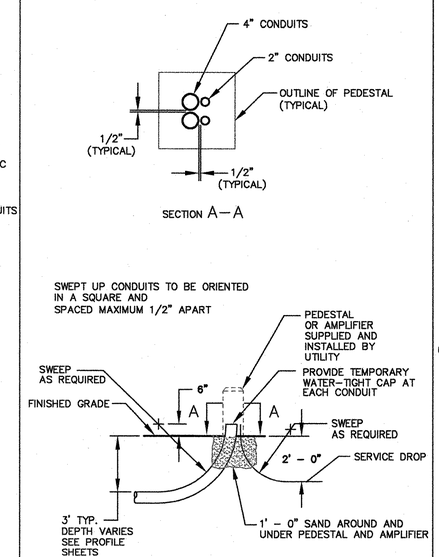

VERIZON/ADELPHIA PEDESTAL INSTALLATION

SCALE: NONE

BURLINGTON ELECTRIC DEPARTMENT

BURLINGTON, VERMONT

DETAILS

DRAWN BY: JFT	SCALE: AS NOTED	DWG. NO.: D8011700
ORIGINAL DATE: 03/23/04	CHECKED BY/DATE	SHEET 99 OF 252