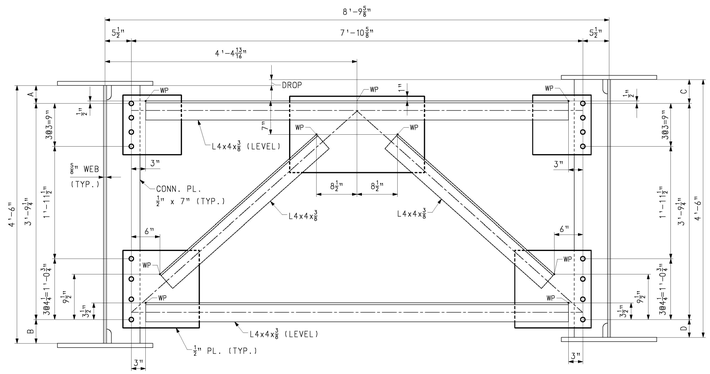

INTERM. CROSSFRAME LAYOUT

(LOOKING BACK STATIONS)

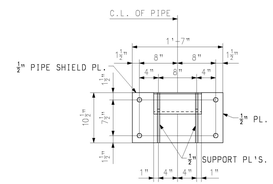

SECTION A

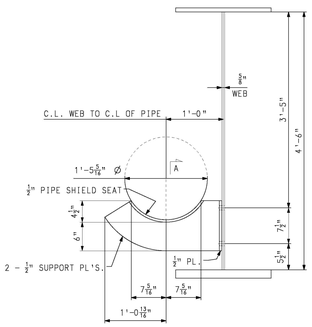

UTIL. BRACKET LAYOUT

(LOOKING STATIONS AHEAD ON G1 FASCIA)

DROP	A	B	C	D
1 1/4	3 3/4	5	5	3 3/4
1"	4	4 3/4	5	3 3/4
1/4	4 3/4	4	5	3 3/4
0"	5	3 3/4	5	3 3/4
(-) 1 1/4	5	3 3/4	4 3/4	4
(-) 1 3/4	5	3 3/4	4 1/4	4 1/2
(-) 1"	5	3 3/4	4	4 3/4

Vermont Agency of Transportation

RECEIVED

Structural Steel_Approved 12.5.14.pdf

CK'D BY CLB OK'D BY DRP

November 25, 2014

RESUBMIT NO Approved

BY C. CARLSON DATE 12/5/14

WORK THIS DRAWING WITH DRAWING WS1.
FOR NOTES, SEE DRAWING WS1.

NOTE
THE PURPOSE OF THIS DRAWING IS TO COORDINATE GEOMETRIC CONTROL INFORMATION. THIS DRAWING IS SUBMITTED FOR INFORMATION ONLY AND IS NOT INTENDED FOR SHOP FABRICATION. THIS DRAWING IS FOR REFERENCE ONLY. APPROVAL IS NOT REQUIRED.

NO.	REVISION	BY	CHK'D	DATE
△				
△				
△				

HOLES 13/16" Ø

BOLTS

COATING

CODE(S)

SCALE N.T.S.

VT

HIGH STEEL STRUCTURES INC.
An ISO 9001:2000 Certified Company
A WHITLOCK of High Industries Inc.
305 Old Philadelphia Pike
Lancaster, PA 17603-0008
Phone (717) 299-5211
www.highsteel.com

TYPICAL DETAILS - CROSSFRAME & UTILITY SUPPORT LAYOUT

VT RT 108 OVER LITTLE RIVER

VT RT 108 STA. 3+48.00 TO STA. 4+78.00

TOWN OF STOWE, LAMOILLE COUNTY, VERMONT

STATE OF VERMONT

AGENCY OF TRANSPORTATION

STATE CONT. OR REF. NO.	BRF 0235 (11)	FED. AID PROJ. NO.	
GENERAL CONTRACTOR	CCS CONSTRUCTORS LLC	HSSI PROJ. MGR	KEN GLIDDEN
DRAWING MANAGER	DAVE PAINTER (IH)	MADE BY MAF	CHK'D BY MGK DATE 11/12/14
HSSI PROJECT NUMBER	S-1140166A-1	DRAWING NUMBER	TD1 OF TD1

SHIPMENT 1 PAGENAM: S0250216 PRG: S0250216 SHIPGREPCT: S0250216

PLOTTED: MM/DD/YY HH:mm:ss BY: XXXXXXXX