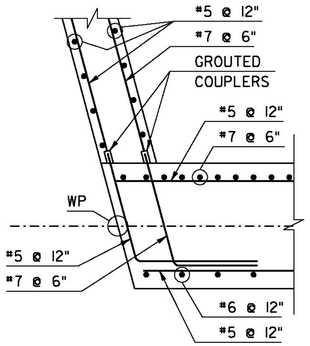

WW2 CORNER DETAIL PCU

SCALE: ½" = 1'-0"
(BELOW SEAT)

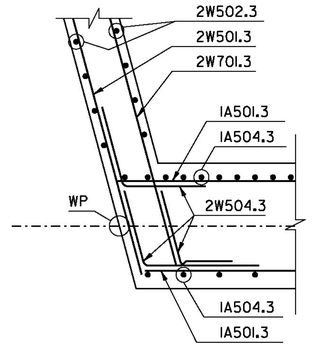

WW2 CORNER DETAIL CIP

SCALE: ½" = 1'-0"
(ABOVE SEAT)

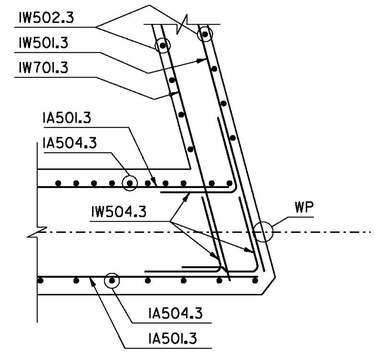

WW1 CORNER DETAIL CIP

SCALE: ½" = 1'-0"
(ABOVE SEAT)

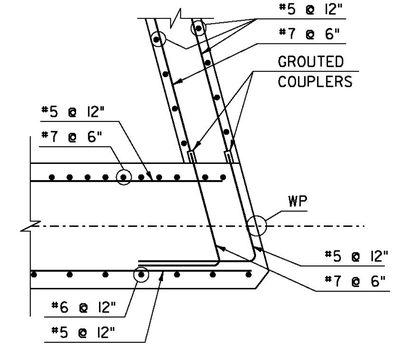

WW1 CORNER DETAIL PCU

SCALE: ½" = 1'-0"
(BELOW SEAT)

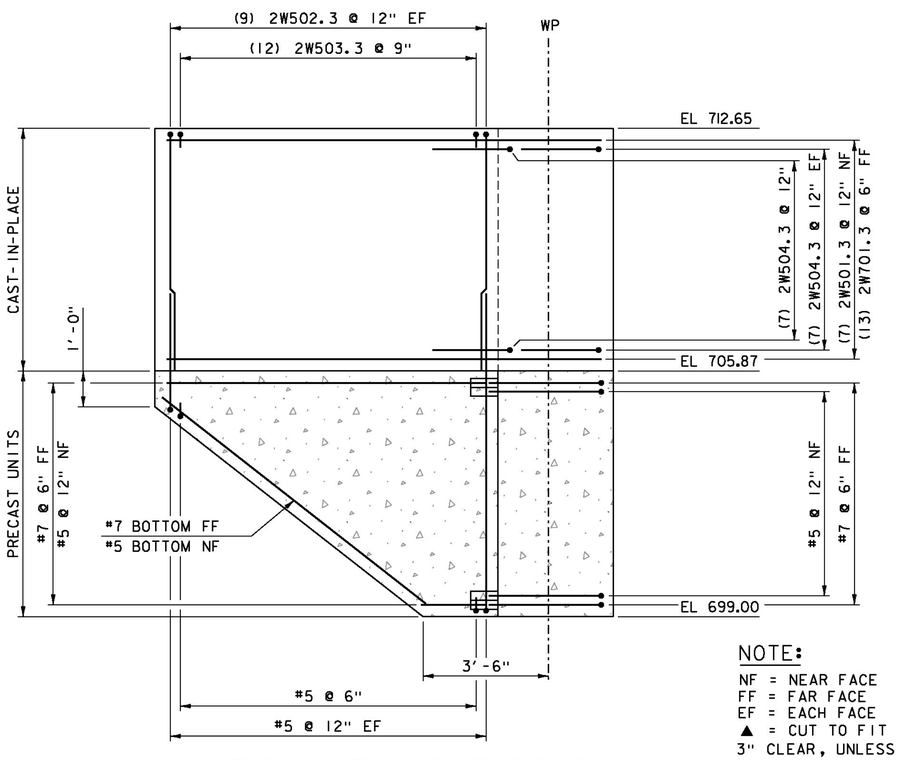

WINGWALL 2 - ELEVATION

SCALE: ½" = 1'-0"

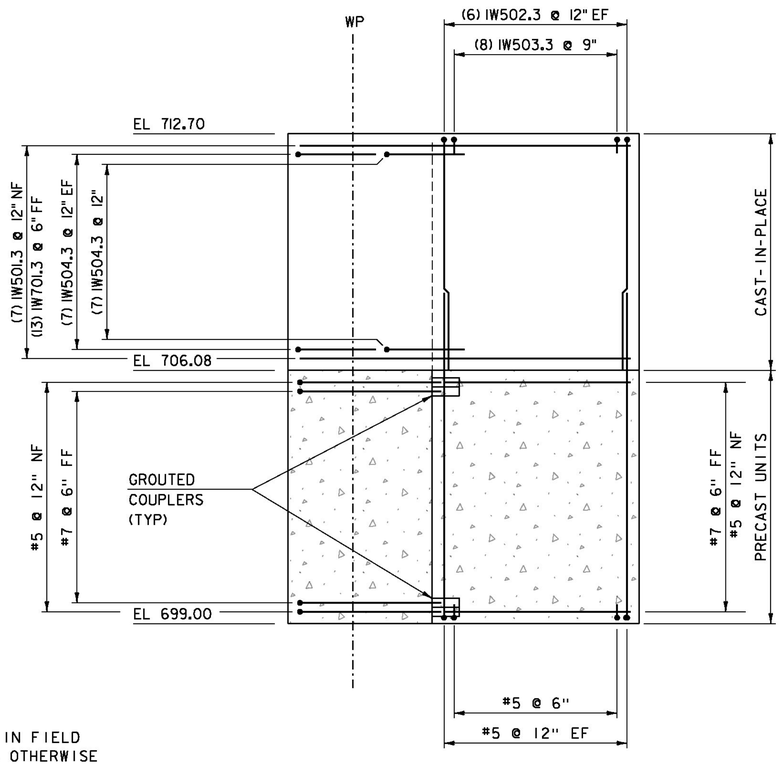

WINGWALL 1 - ELEVATION

SCALE: ½" = 1'-0"

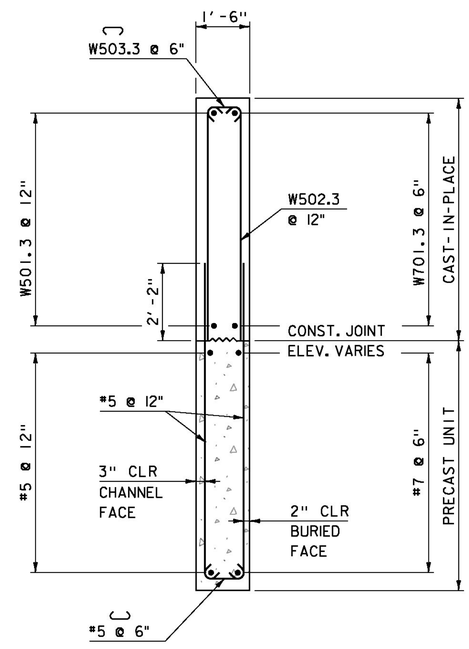

WINGWALL 1-4 - TYPICAL

SCALE: ½" = 1'-0"

NOTE:

NF = NEAR FACE
FF = FAR FACE
EF = EACH FACE
▲ = CUT TO FIT IN FIELD
3" CLEAR, UNLESS OTHERWISE SPECIFIED ON THE PLANS.
2'-2" BAR LAP UNLESS OTHERWISE SPECIFIED ON THE PLANS.

PROJECT NAME: STOWE	
PROJECT NUMBER: BRF 0235 (11)	
FILE NAME: s87e052sub.dgn	PLOT DATE: 28-JUL-2014
PROJECT LEADER: C. CARLSON	DRAWN BY: M. LONGSTREET
DESIGNED BY: D. PETERSON	CHECKED BY: C. BURRALL
WINGWALL 1 - 2 ELEVATIONS & TYPICAL	SHEET 42 OF 64