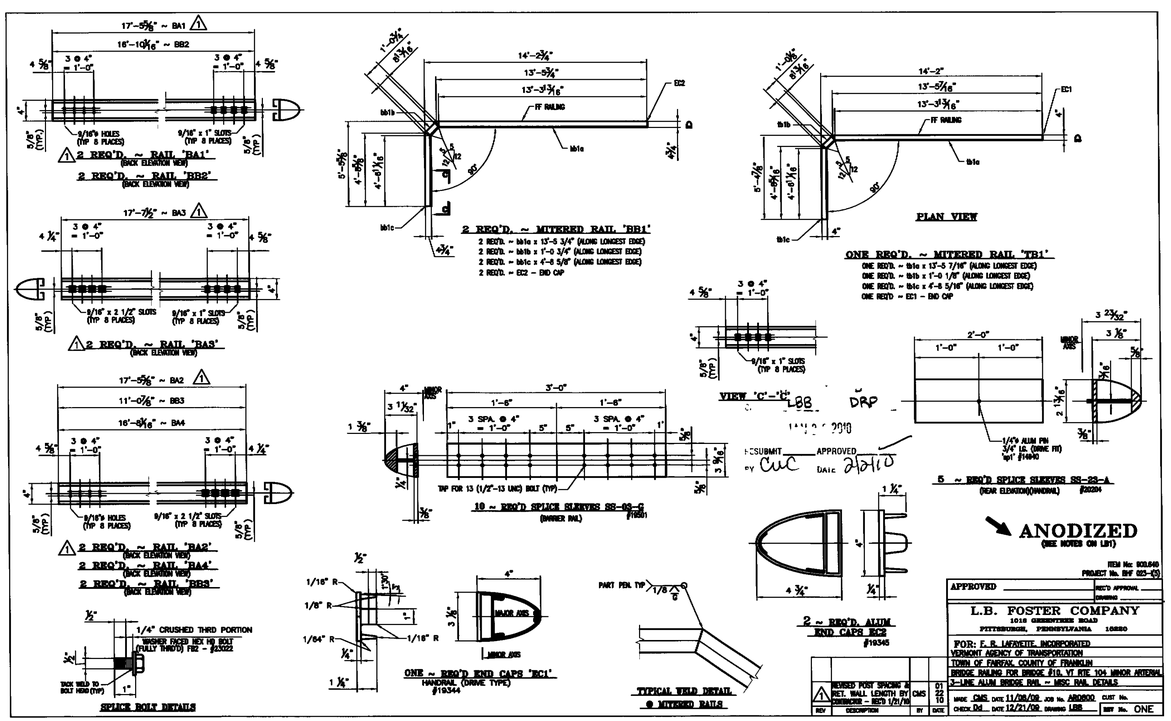
17'-5 5/8" ~ BA1
16'-10 3/16" ~ BB2
2 REQ'D. ~ RAIL 'BA1'
(BACK ELEVATION VIEW)
2 REQ'D. ~ RAIL 'BB2'
(BACK ELEVATION VEW)
17'-7 1/2" ~ BA3
2 REQ'D. ~ RAIL 'BA3'
(BACK ELEVATION VEW)
17'-5 5/8" ~ BA2
11'-0 7/8" ~ BB3
16'-8 9/16" ~ BA4
2 REQ'D. ~ RAIL 'BA2'
(BACK ELEVATION VEW)
2 REQ'D. ~ RAIL 'BA4'
(BACK ELEVATION VEW)
2 REQ'D. ~ RAIL 'BB3'
(BACK ELEVATION VEW)
SPLICE BOLT DETAILS
2 REQ'D. ~ MITERED RAIL 'BB1'
2 REQ'D. ~ bb1e x 13'-5 3/4" (ALONG LONGEST EDGE)
2 REQ'D. ~ bb1b x 1'-0 3/4" (ALONG LONGEST EDGE)
2 REQ'D. ~ bb1c x 4'-8 5/8" (ALONG LONGEST EDGE)
2 REQ'D. ~ EC2 ~ END CAP
PLAN VIEW
ONE REQ'D. ~ MITERED RAIL 'TB1'
ONE REQ'D. ~ tb1e x 13'-5 7/16" (ALONG LONGEST EDGE)
ONE REQ'D. ~ tb1b x 1'-0 1/8" (ALONG LONGEST EDGE)
ONE REQ'D. ~ tb1c x 4'-8 5/16" (ALONG LONGEST EDGE)
ONE REQ'D ~ EC1 ~ END CAP
VIEW 'C'-'C'
10 ~ REQ'D SPLICE SLEEVES SS-23-B
(INNER RAIL)
5 ~ REQ'D SPLICE SLEEVES SS-23-A
(REAR ELEVATION)(INNER RAIL)
ONE ~ REQ'D END CAPS 'EC1'
HANDRAIL (DRIVE TYPE)
#19344
TYPICAL WELD DETAIL
@ MITERED RAILS
2 ~ REQ'D. ALUM
END CAPS EC2
#19345
ANODIZED
(SEE NOTES ON LIST)
SUBMIT APPROVED
BY CUC DATE 2/27/10
L.B. FOSTER COMPANY
1016 GREENTREE ROAD
PITTSBURGH, PENNSYLVANIA 15220
FOR: F. H. LAFRENIE, INCORPORATED
VERMONT AGENCY OF TRANSPORTATION
TOWN OF FAIRFAX, COUNTY OF FRANKLIN
BRIDGE RAILING FOR BRIDGE #10, VT RTE 104 MINOR ARTERIAL
3-LINE ALUM BRIDGE RAIL ~ MISC. RAIL DETAILS
ITEM No: BGL040
PROJECT No. BHF 023-(3)
REVISED POST SPACING & RET. WALL LENGTH BY CHRONICLE ~ RECD 1/21/10
CMS
01 02 10
DWG: CMS DATE: 11/06/08 JOB No. AR0800 CUST No.
CHECK Dd DATE: 12/21/08 REVISED: LBB REF No. ONE