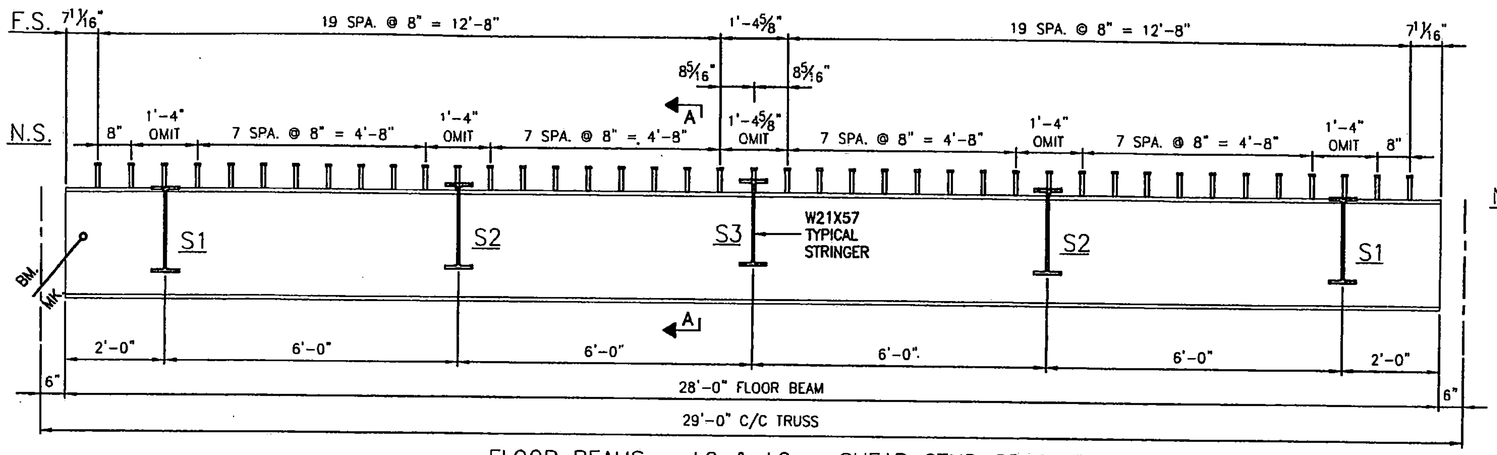

FLOOR BEAMS ~ L0 & L2 ~ SHEAR STUD SPACING

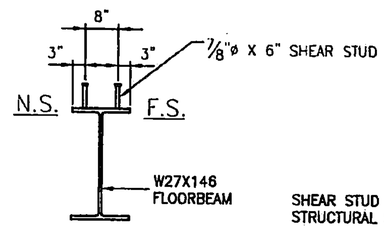

SECTION A–A

SHEAR STUD SPACING SHOULD BE VERIFIED BY STRUCTURAL STEEL SUPPLIER FOR COORDINATION.

[N.S. NEAR SIDE] [F.S. FAR SIDE]

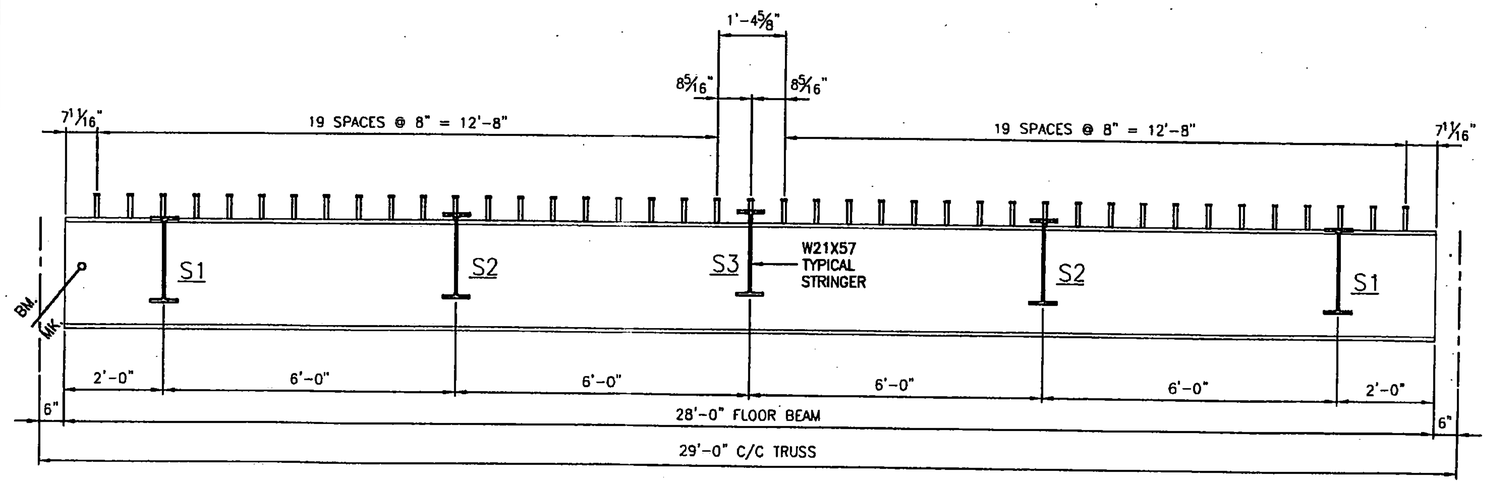

FLOOR BEAMS ~ L1 & L6 ~ SHEAR STUD SPACING

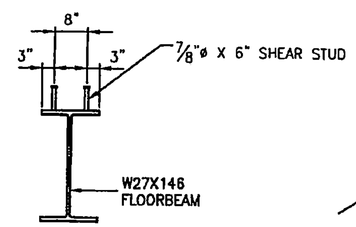

STATE OF NEW HAMPSHIRE
MICHAEL P. REINA
No. 10369
LICENSED
PROFESSIONAL ENGINEER
1/8/11

RECEIVED
SUB. NO. 17 CKD.
JAN 17 2011
RESUBMIT ____ APPROVED ✓
BY KMH DATE 1/20/11

APPROVED: ____ REV'D APPR. ____

L. B. FOSTER CO.
GENERAL OFFICES
PITTSBURGH, PENNSYLVANIA 15220

FOR: MILLER CONSTRUCTION
STATE OF VERMONT AGENCY OF TRANSPORTATION
TOWN OF BRIDGEWATER, COUNTY OF WINDSOR
VT. ROUTE 100A, BR14 PROJ. NO. BRS 0149 (4)
SHEAR STUD LAY OUT FOR FLOOR BEAMS

MADE BLJ DATE 12/09/10 JOB NO. SD0339 CUST. NO.
CHECK ____ DATE ____ DRAWING LBE10 REV. NO.

REV	DESCRIPTION	BY	DATE	CHKD.

~~#86~~ 187 PRE FAB DECK PANELS