180

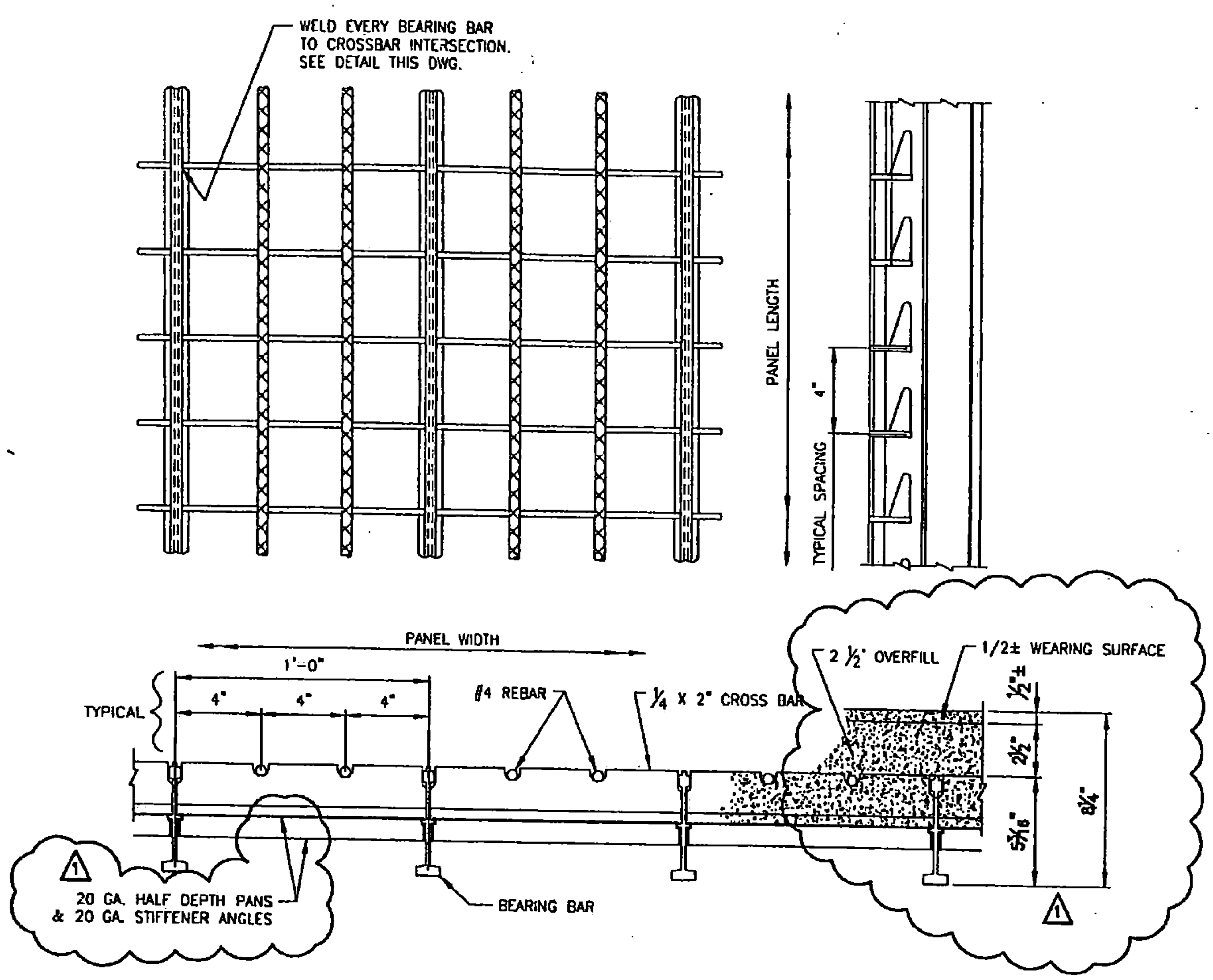

PROPOSED TYPICAL FLOORING DETAILS

(FORM PANS NOT SHOWN IN PLAN VIEW)

STANDARD PANEL TOLERANCES	
PANEL WIDTH	+0 -1/8
PANEL LENGTH	±1/4
SQUARENESS	±1/2
TRANSVERSE CAMBER (WIDTH)	.004 x WIDTH
LONGITUDINAL CAMBER (LENGTH)	.003 x LENGTH
SIDE BOW (SWEEP)	.025 X LENGTH
MAIN BAR VERTICALITY	.04 X HEIGHT
CROSS BAR VERTICALITY	.04 X HEIGHT

MATERIAL SPECIFICATIONS

DESCRIPTION	ASTM	ALLOY / GR.	REMARKS
BEARING BARS, CROSS BARS, & TRIM PL'S	A 709	GRADE 50	GALVANIZED
⚠1 REBAR	A 615	GR. 60	HOT DIPPED GALV'D
⚠1 16 GA. FORM PANS 20 GA. FLAT PANS 20 GA. HAUNCH PANS 20 GA. STIFFENER ANGLES 20 GA. HAUNCH STRAPS	A 653	GR. 90 OR BETTER	GALV'D-FIELD INSTALLED OR PANS INSTALLED AFTER GALV
5/8" FULLY THREADED ROD	A 449		HOT DIPPED GALV'D
5/8" HVY HEX NUTS	A 563	GR. DH	HOT DIPPED TAPPED GALV'D OVERSIZE
⚠1 TEK SCREWS			S-MD 8-18X1/2HWH #2 ZINC PLATED

GENERAL NOTES:

⚠1 MATERIAL AND WORKMANSHIP SHALL BE IN ACCORDANCE WITH THE VERMONT AGENCY OF TRANSPORTATION 2006 STANDARD SPECIFICATIONS FOR CONSTRUCTION INCLUDING ALL ADDITIONS AND REVISIONS AND THE CONTRACT DOCUMENTS.

SHOP WELDING SHALL BE PERFORMED BY THE GAS METAL ARC PROCESS (MIG) USING ER70S-3 FILLER METAL PER AWS D1.5 OF THE BRIDGE WELDING CODE.

AFTER FABRICATION, GRID PANELS SHALL BE HOT DIPPED GALVANIZED PER ASTM A123. DUE TO THE GALVANIZING PROCESS, PANELS MAY HAVE SOME DISTORTION AND SIDE SWEEP WHICH WILL REQUIRE ADJUSTMENT BY THE CONTRACTOR PRIOR TO INSTALLATION.

⚠1 CUT ENDS OF REBAR TO BE TOUCHED UP AT THE GALVANIZER WITH COLD GALV. SPRAY. PER ASTM A 780.

PAY ITEM: 900.670 HALF-FILEED GRID DECK
PAY AREA: 3,347 SQ. FT.

RECEIVED.
CK'D BY 107 OK'D BY
JAN 17 2011
RESUBMIT ____ APPROVED ✓
BY KMH DATE 1/20/11

STATE OF NEW HAMPSHIRE
MICHAEL P. REINA
No. 10369
LICENSED
PROFESSIONAL ENGINEER
11/3/10

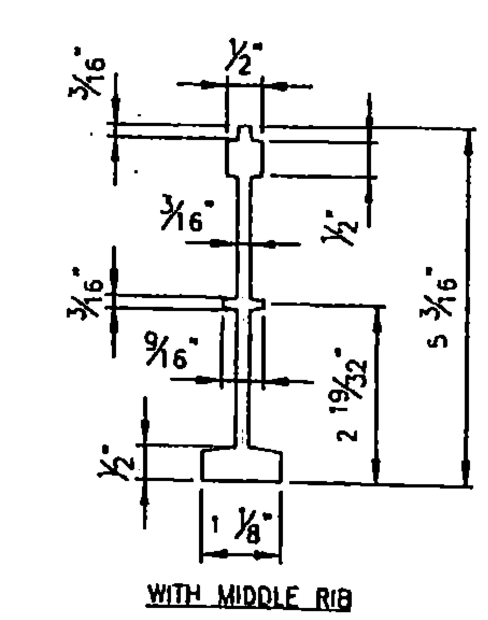

BEARING BAR PROFILES

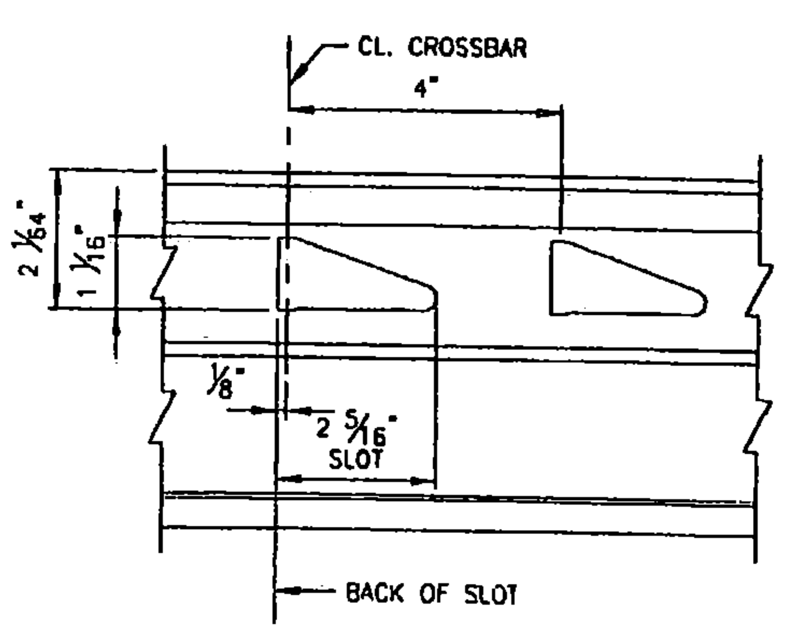

BEARING BAR SLOT DETAIL

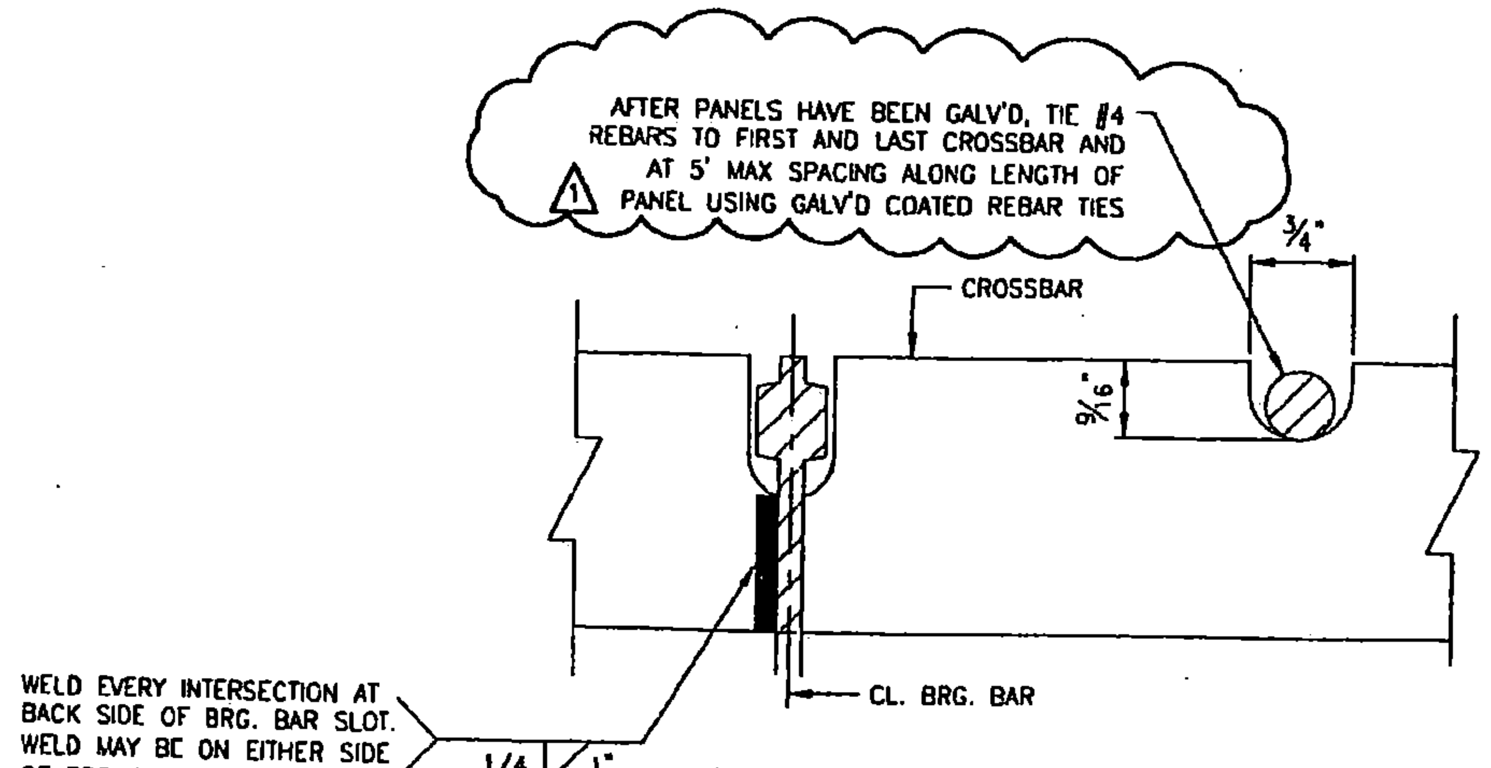

GRID COMPONENT WELD DETAILS

REV	DESCRIPTION	BY	DATE	CHK'D
1	APPROVAL COMMENTS	BLJ	10/25 10	

APPROVED: ____

L. B. FOSTER CO.
GENERAL OFFICES
PITTSBURGH, PENNSYLVANIA 15220

FOR: MILLER CONSTRUCTION
STATE OF VERMONT AGENCY OF TRANSPORTATION
TOWN OF BRIDGEWATER, COUNTY OF WINDSOR
VT. ROUTE 100A, BR14 PROJ. NO. BRS 0149 (4)
GENERAL NOTES AND TYPICAL DETAILS

MADE WPO DATE 8/18/10 JOB NO. SD0339 CUST. NO.
CHECK RLP DATE 9/11/10 DRAWING LB1 REV. NO. 1

180 PRE FAB
DECK PANELS