146 STRUCTURAL STEEL

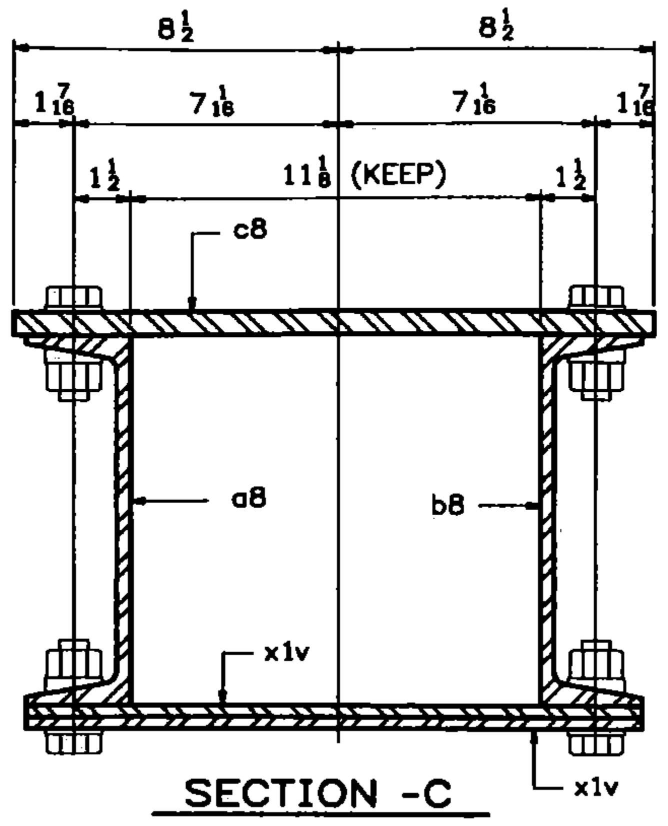


SECTION -C
(TYPICAL PORTAL TOP CHORD SECTION)
(ENLARGED)
(ON 8AB)

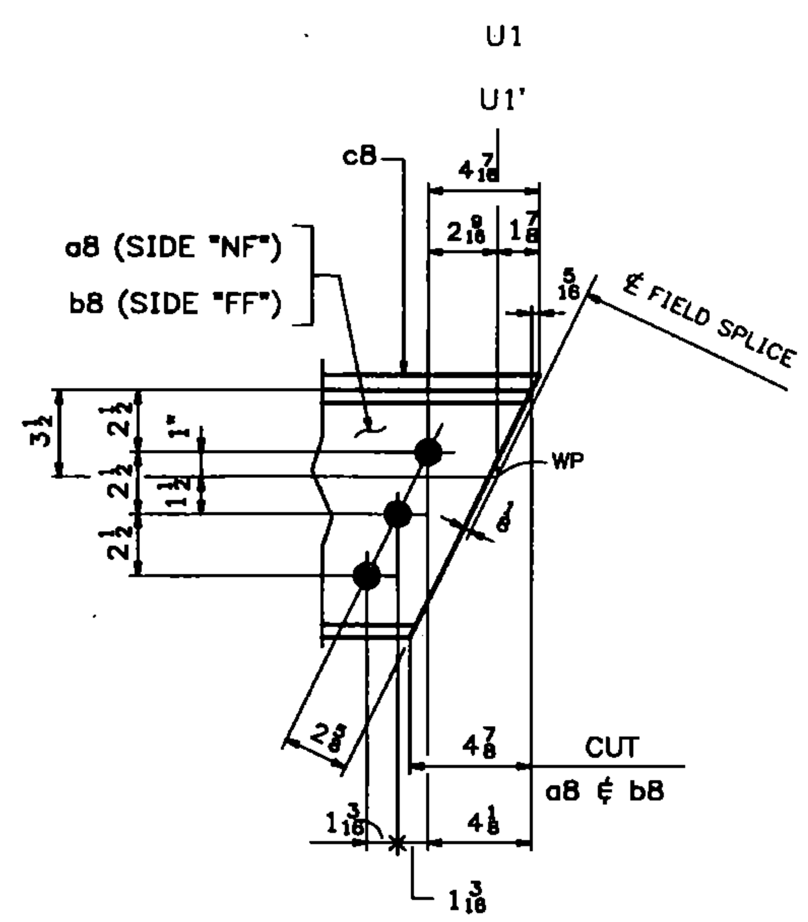


DETAIL "E"
(ENLARGED) (ON 8AB)
(WEB FILL PLATES NOT SHOWN FOR CLARITY)

| ABM INFO | | SHIP | BILL OF MATERIAL | | | | | JOB NO. | DRAWING NO. | | REV. |
|---|---|---|---|---|---|---|---|---|---|---|---|
| | | | | | | | | 454 | 8B | | |
| PAGE | LINE | MARK | QTY | MARK | MATERIAL | LENGTH FT | LENGTH INCHES | REMARKS | WT | PROCUREMENT NOTES | |
| | | 8D1W | 1 | | PORTAL TOP CHORD | | | ALIKE EXCEPT | 2318 | | |
| | | 8D9E | 1 | | PORTAL TOP CHORD | | | FOR MARK | 2318 | | |
| | | | | | | | | | | | |
| 3 | B | | 2 | a8 | C 10x20 | 24 | 5 9/16 | (GALVANIZED) M270-50T2 | | | |
| 3 | B | | 2 | b8 | C 10x20 | 24 | 5 9/16 | (GALVANIZED) M270-50T2 | | | |
| 3 | C | | 2 | c8 | PL ⅝x17 | 24 | 5⅞ | (GALVANIZED) M270-50T2 | | | |
| | | | | | | | | | | | |
| 2 | P | | 64 | x1v | PL 5/16x2¼ | 1 | 8 13/16 | (GALVANIZED) | | | |
| 2 | P | | 8 | x1w | PL 5/16x2¼ | 1 | 8⅛ | (GALVANIZED) | | | |
| 3 | M | | 4 | x1y | PL ⅛x8 △1 | 2 | 0 ⅝ | (GALVANIZED) | | | |
| 3 | E | | 2 | x2k | PL 5/16x13½ △2 | 2 | 2 15/16 | (GALVANIZED) | | | |
| 3 | F | | 2 | x2m | PL ⅜x18 | 2 | 2 15/16 | (GALVANIZED) | | | |
| 3 | J | | 2 | x2w | L 4x4x⅜ | 2 | 8¾ | (GALVANIZED) | | | |
| 3 | J | | 2 | x2y | L 4x4x⅜ △2 | 2 | 8¾ | (GALVANIZED) | | | |
| 3 | K | | 2 | x2ac | PL 9/16x17 | 1 | 6 | (GALVANIZED) | | | |
| 3 | L | | 4 | x2ad | PL ½x4 △2 | 1 | 4⅞ | (GALVANIZED) | | | |
| | | | | | | | | | | | |
| 10 | D | | 28 | | ¾ ⌀ HSB | 0 | 2¼ | (GALVANIZED) A325-1 | | | |
| 10 | E | | 20 | | ¾ ⌀ HSB | 0 | 2½ | (GALVANIZED) A325-1 | | | |
| 10 | F | △1 | 264 | | ¾ ⌀ HSB | 0 | 2¾ | (GALVANIZED) A325-1 | | | |
| 10 | G | | 20 | | ¾ ⌀ HSB | 0 | 3 | (GALVANIZED) A325-1 | | | |
| 10 | P | | 332 | | ¾ ⌀ HSW | | | (GALVANIZED) F436 | | | |
| 10 | Q | | 332 | | BEVEL WASH FOR ¾⌀ HSB | | | (GALVANIZED) F436 | | | |

T2 - DENOTES MATERIAL SUBJECT TO CHARPY V-NOTCH TESTING

**Vermont Agency of Transportation**
**RECEIVED**
CK'D BY TCF OK'D BY SSS
**7:43 am, Apr 12, 2011**
RESUBMIT APPROVED X
BY KMH DATE 4-12-11

WORK THIS DWG. WITH DWG. 8AB.

| REV. | DATE | REMARKS | DWN | CHK | APVL | SHOP |
|---|---|---|---|---|---|---|
| △2 | 03/23/11 | REVISED AS PER APPROVAL COMMENTS | JM | PWR | | |
| △1 | 03/02/11 | REVISED AS PER APPROVAL COMMENTS | JM | PWR | | |
| 0 | | | | | | |

| MATERIAL: | SURFACE PREP. ℄ PAINT: | HOLES: | SHOP BOLTS: |
|---|---|---|---|
| M270-50 (U.N.) | SEE DWG GN1 | 13/16 ⌀(U.N.) | AS NOTED |

DESCRIPTION: PORTAL TOP CHORD 8D1W ℄ 8D9E

**CASCO BAY STEEL STRUCTURES, INC.**
75 SPRING HILL ROAD SACO, MAINE 04072
PHONE (207) 282-7360 FAX. (207) 282-1179
TENSOR 3015

| | | | |
|---|---|---|---|
| STRUCTURE: | Vermont Route 100A<br>Bridge No. 14<br>Bridgewater<br>County of Windsor | DRAWN: RB | DATE: 9/30/10 |
| | | CHKD: WJL | DATE: 10/19/10 |
| LOCATION: | BRIDGEWATER, VERMONT | JOB NO. | DWG NO. |
| PROJ NO. | BRS 0149(4) | 454 | 8B |
| CUSTOMER: | VT AOT | | REV. △2 |