127 STRUCTURAL STEEL

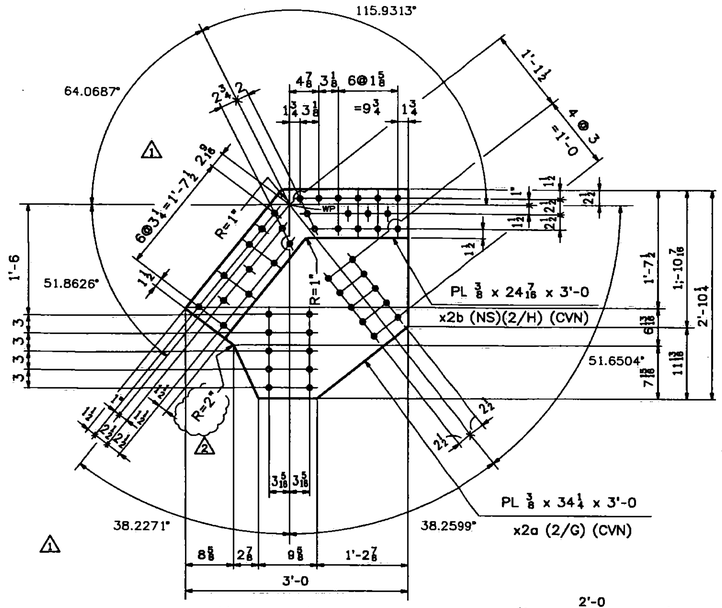

8 ~ GUSSET PLATES ~ x2a
(INNER GUSSET PLATES AT U1,U1')

8 ~ GUSSET PLATES ~ x2b
(OUTER GUSSET PLATES AT U1,U1')

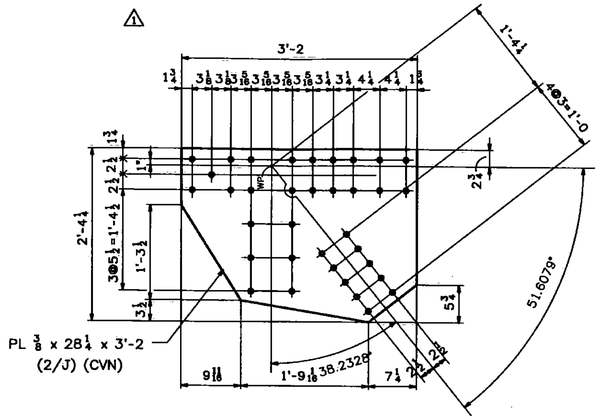

8 ~ GUSSET PLATES ~ x2c
(GUSSET PLATES AT U2,U2')

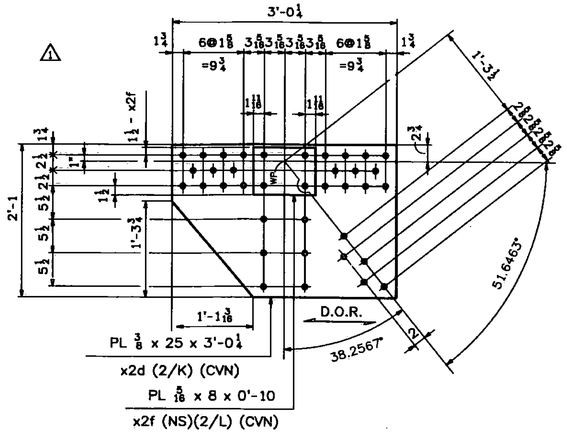

8 ~ GUSSET PLATES ~ x2d
(INNER GUSSET PLATES AT U3,U3')

8 ~ GUSSET PLATES ~ x2f
(OUTER GUSSET PLATES AT U3,U3')

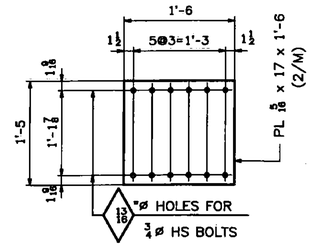

20 ~ TAB PLATES ~ x2g
(@ BOTTOM OF TOP CHORDS)

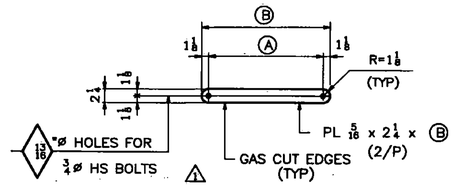

LATERAL BAR PLATES
(@ TOP CHORDS)

MARK	REQ'D	Ⓐ	Ⓑ
x2h	184	1'-6 3/8	1'-8 5/8
x2ha	16	1'-5 11/16	1'-7 15/16

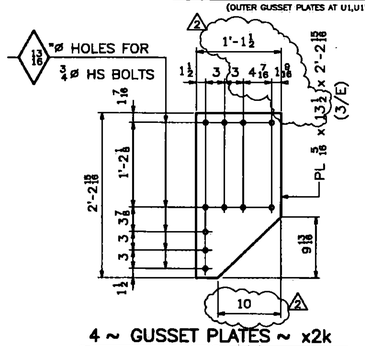

4 ~ GUSSET PLATES ~ x2k
(UPPER GUSSET PLATES AT L0-U1,L0'-U1' DIAGONALS)

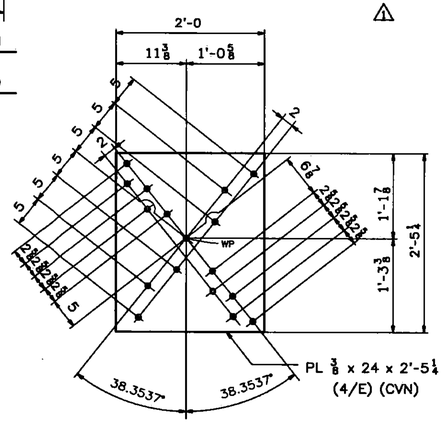

4 ~ GUSSET PLATES ~ x2n
(CENTER GUSSET PLATES AT L3-U3',L3'-U3 DIAGONALS)

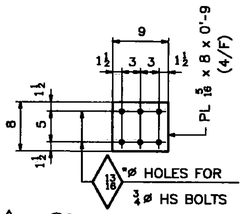

48 ~ TAB PLATES ~ x2p
(@ L2-U1, L2'-U1', L3-U2, L3'-U2' DIAGONALS)

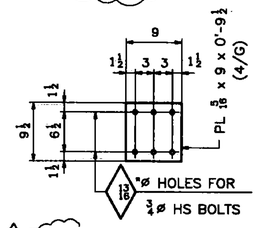

24 ~ TAB PLATES ~ x2s
(@ L3-U3, L3'-U3 DIAGONALS)

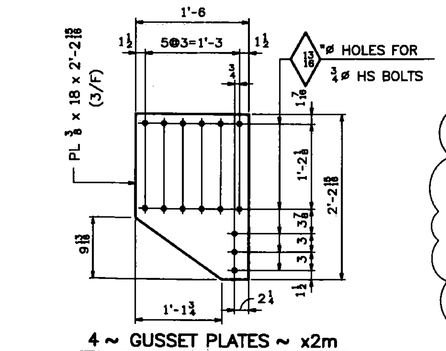

4 ~ GUSSET PLATES ~ x2m
(LOWER GUSSET PLATES AT L0-U1,L0'-U1' DIAGONALS)

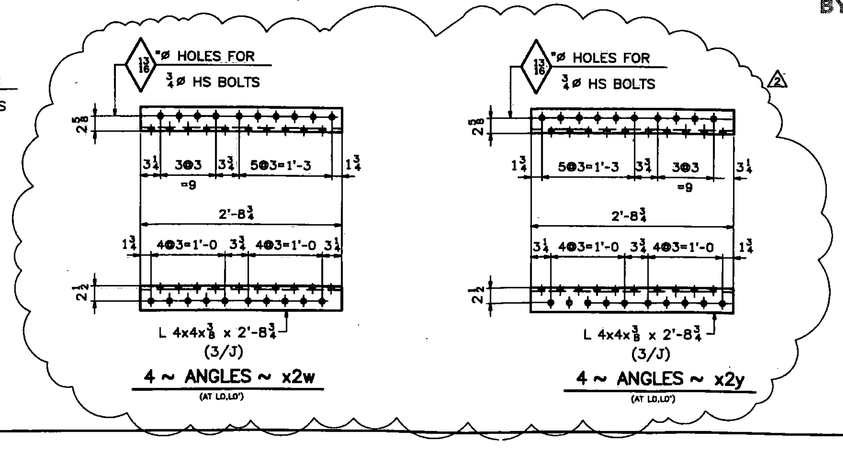

4 ~ ANGLES ~ x2w
(AT L0,L0')

4 ~ ANGLES ~ x2y
(AT L0,L0')

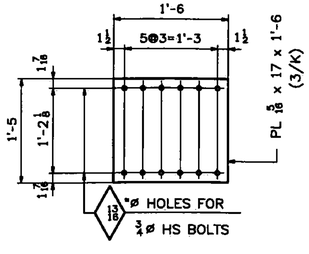

4 ~ TAB PLATES ~ x2ac
(@ L0,L0' END DIAGONALS)

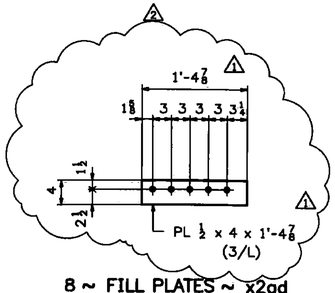

8 ~ FILL PLATES ~ x2ad
(@ L0,L0' END DIAGONALS)

Vermont Agency of Transportation
RECEIVED
CK'D BY TCF OK'D BY SSS
7:43 am, Apr 12, 2011
RESUBMIT ____ APPROVED X
BY KMH DATE 4-12-11

SHOP NOTE:
ALL STEEL PARTS ON THIS DRAWING SHALL BE GALVANIZED

NOTES:
1. FOR GENERAL NOTES SEE DWG. GN1.
2. CVN - DENOTES MATERIAL SUBJECT TO CHARPY V-NOTCH TESTING.
D.O.R. - DENOTES DIRECTION OF MILL ROLLING.

REV.	DATE	REMARKS	DWN	CHK	APVL	SHOP
2	03/23/11	REVISED AS PER APPROVAL COMMENTS	JM	PWR		
1	02/28/11	REVISED AS PER APPROVAL COMMENTS	JM			
0						

MATERIAL: M270-50 (U.N.) | SURFACE PREP. & PAINT: SEE DWG GN1 | HOLES: 13/16 ø(U.N.) | SHOP BOLTS: NONE

DESCRIPTION: UPPER CHORD & DIAGONAL STANDARDS

CASCO BAY STEEL STRUCTURES, INC.
75 SPRING HILL ROAD SACO, MAINE 04072
PHONE (207) 282-7360 FAX. (207) 282-1179
TENSOR 3015

STRUCTURE: Vermont Route 100A
Bridge No. 14
Bridgewater
County of Windsor

DRAWN: RB DATE: 9/20/10
CHKD: WJL DATE: 10/15/10

LOCATION: BRIDGEWATER, VERMONT
PROJ NO. BRS 0149(4)
CUSTOMER: VT AOT
JOB NO. 454
DWG NO. X2
REV. 2