120 STRUCTURAL STEEL

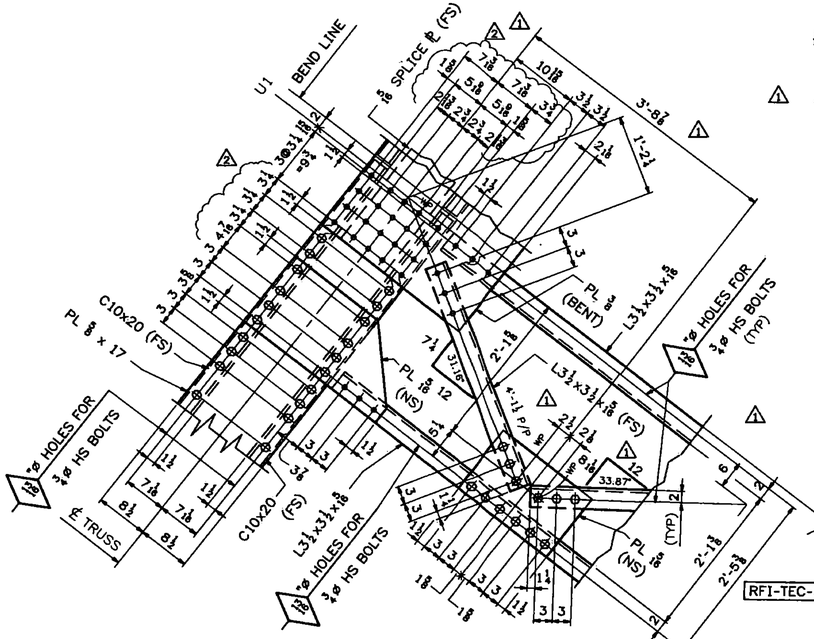

VIEW -3B
(DEVELOPED)

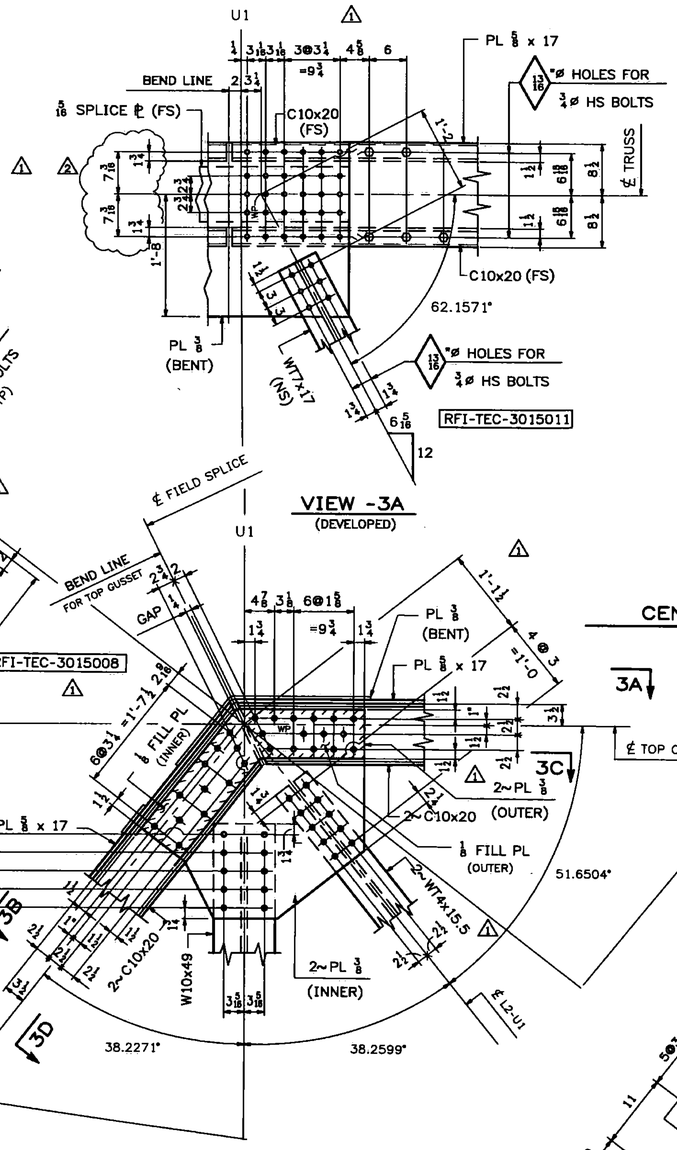

VIEW -3A
(DEVELOPED)

JOINT @ U1

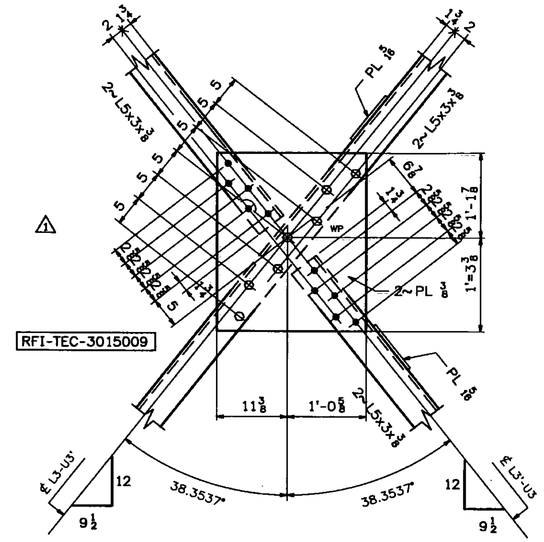

CENTER GUSSET PLATES FOR DIAGONALS L3-U3' ℄ L3'-U3

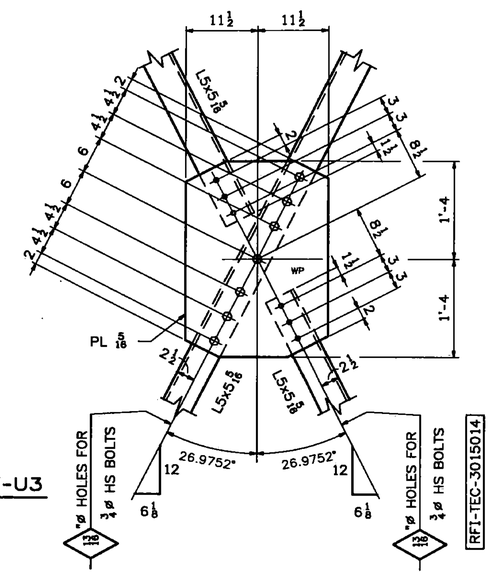

GUSSET PLATES FOR FLOOR LATERAL BRACING

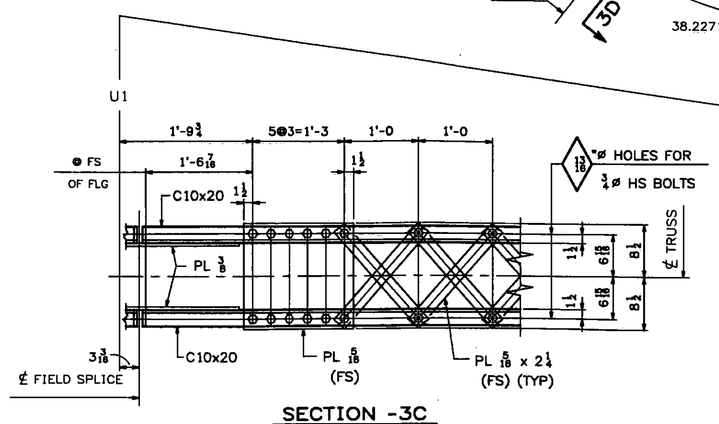

SECTION -3C
(DEVELOPED)

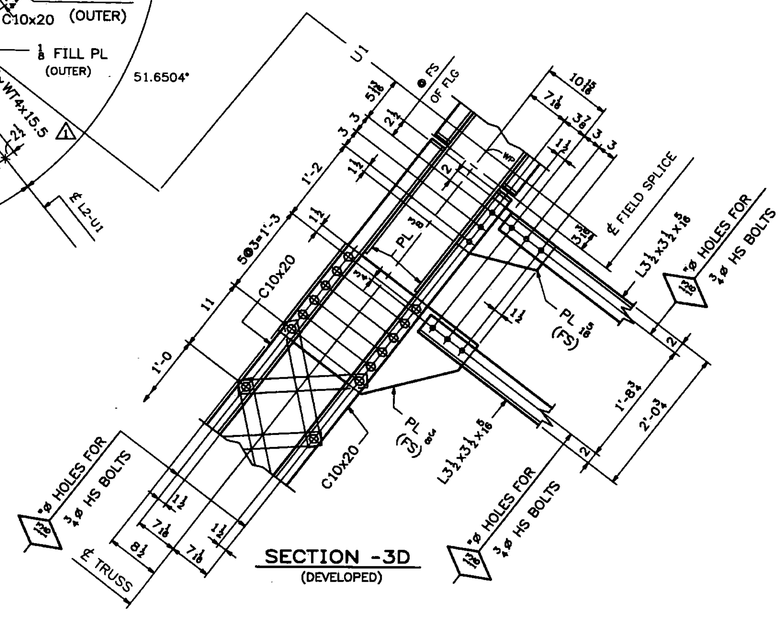

SECTION -3D
(DEVELOPED)

Vermont Agency of Transportation
RECEIVED
CK'D BY TCF OK'D BY SSS
7:43 am, Apr 12, 2011
RESUBMIT ____ APPROVED X
BY KMH DATE 4-12-11

NOTES:
- MAT'L SHALL BE M270 GR50 (GALVANIZED).
- HOLES SHALL BE 13/16"ø (UN).
- BOLTS SHALL BE ⅞"ø A325 TYPE 1 (GALVANIZED) (UN).

NOTE
THE PURPOSE OF THIS DRAWING IS TO COORDINATE GEOMETRIC CONTROL INFORMATION AND CONNECTION SPACING. THIS DWG IS SUBMITTED FOR INFORMATION ONLY & IS NOT INTENDED FOR SHOP FABRICATION. DETAIL DWGS WILL SHOW ALL WELDING AND DIMENSIONS REQ'D FOR FABRICATION.

REV.	DATE	REMARKS	DWN	CHK	APVL	SHOP
2	03/23/11	REVISED AS NOTED	JM	PWR		
1	02/28/11	REVISED AS PER APPROVAL COMMENTS	JM	PWR		
0						

MATERIAL: | SURFACE PREP. & PAINT: | HOLES: | SHOP BOLTS:

DESCRIPTION: LAYOUTS @ U1 & BRACING GUSSET PLATES

CASCO BAY STEEL STRUCTURES, INC.
75 SPRING HILL ROAD SACO, MAINE 04072
PHONE (207) 282-7360 FAX. (207) 282-1179
TENSOR 3015

STRUCTURE:	Vermont Route 100A Bridge No. 14 Bridgewater County of Windsor	DRAWN: RB	DATE: 9/14/10
		CHKD: WJL	DATE: 10/12/10
LOCATION:	BRIDGEWATER, VERMONT	JOB NO.	DWG NO.
PROJ NO.	BRS 0149(4)	454	TD3
CUSTOMER:	VT AOT		REV. 2