162 STRUCTURAL STEEL

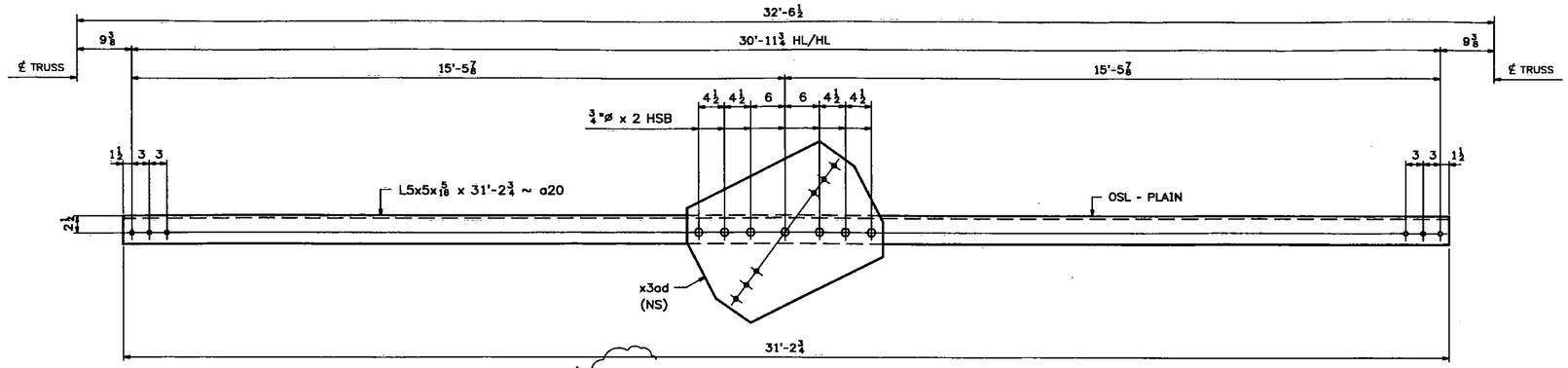

5 - LATERAL BRACING - 20LB1

(FLOOR LATERAL BRACING)

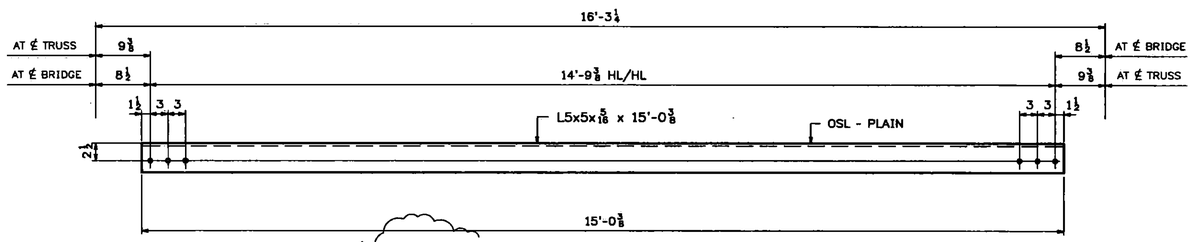

12 - LATERAL BRACING - 20LB2

(FLOOR LATERAL BRACING)

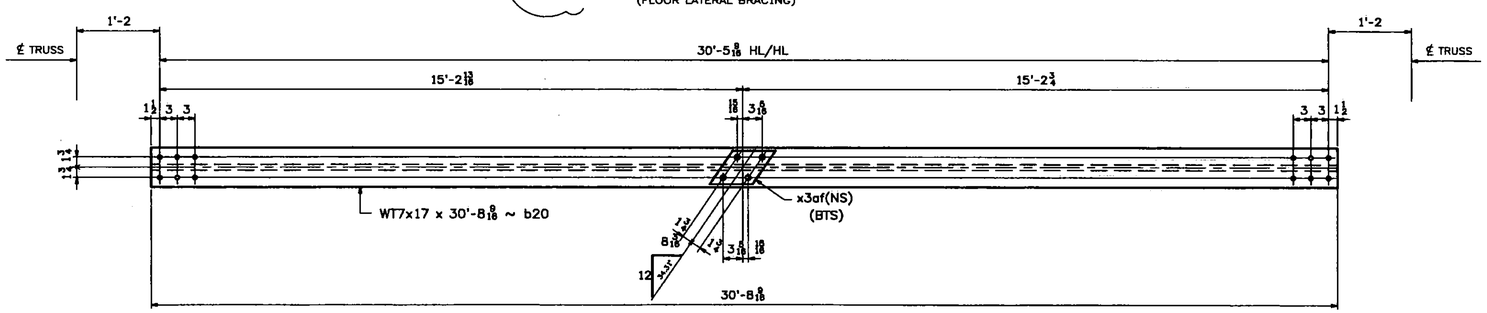

5 - LATERAL BRACING - 20LB3

(ROOF LATERAL BRACING)

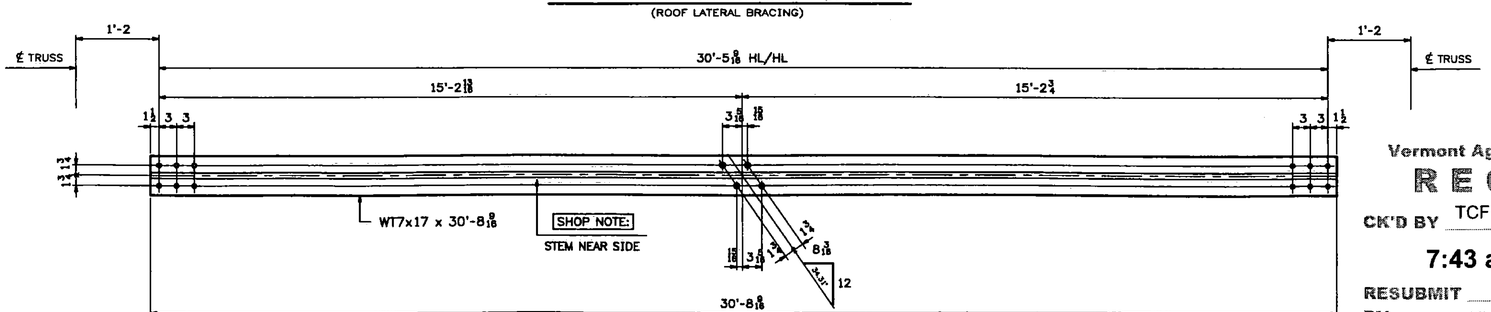

5 - LATERAL BRACING - 20LB4

(ROOF LATERAL BRACING)

ABM INFO		SHIP	BILL OF MATERIAL						JOB NO. 454	DRAWING NO. 20	REV.
PAGE	LINE	MARK	QTY	MARK	MATERIAL	LENGTH FT	LENGTH INCHES	REMARKS	WT	PROCUREMENT NOTES	
		20LB1	5		LATERAL BRACING				391		
5	M		5	a20	L 5x5x5/16	31	2¾	(GALVANIZED)			
5	N	1	5	x3ad	PL 3/8x23	2	8	(GALVANIZED)			
10	C		35		¾ # HSB	0	2	(GALVANIZED) A325-1			
10	P		35		¾ # HSW			(GALVANIZED) F436			
			1		LATERAL BRACING						
5	M	20LB2	12		L 5x5x5/16	15	0⅞	(GALVANIZED)	155		
		20LB3	5		LATERAL BRACING				528		
5	Q		5	b20	WT 7x17	30	8 9/16	(GALVANIZED)			
5	R		5	x3af	PL 3/8x6	0	11⅞	(GALVANIZED)			
					LATERAL BRACING						
5	Q	20LB4	5		WT 7x17	30	8 9/16	(GALVANIZED)	522		

SHOP NOTE:

ALL STEEL FOR LATERAL BRACING SHALL BE GALVANIZED

NOTES:

1. FOR GENERAL NOTES SEE DWG. GN1.
2. FOR STANDARD DETAILS SEE DWG. X3.
3. ALL BOLTS SHALL BE FULLY TORQUED (UN).
4. BTS - DENOTES BOLT TO SHIP OR SECURE FOR SHIPMENT.
5. OSL - DENOTES OUTSTANDING LEG OF ANGLE.

Vermont Agency of Transportation
RECEIVED
CK'D BY TCF OK'D BY SSS
7:43 am, Apr 12, 2011
RESUBMIT ____ APPROVED X
BY KMH DATE 4-12-11

REV.	DATE	REMARKS	DWN	CHK	APVL	SHOP
1	03/03/11	REVISED AS PER APPROVAL COMMENTS	JM	PWR		
0						

MATERIAL:	SURFACE PREP. & PAINT:	HOLES:	SHOP BOLTS:
M270-50 (U.N.)	SEE DWG GN1	13/16 ø	AS NOTED

DESCRIPTION: FLOOR & ROOF LATERAL BRACING

CASCO BAY STEEL STRUCTURES, INC.
75 SPRING HILL ROAD SACO, MAINE 04072
PHONE (207) 282-7360 FAX. (207) 282-1179
TENSOR 3015

STRUCTURE:	Vermont Route 100A Bridge No. 14 Bridgewater County of Windsor	DRAWN: RB	DATE: 10/9/10
		CHKD: WJL	DATE: 10/19/10
LOCATION:	BRIDGEWATER, VERMONT	JOB NO. 454	DWG NO. 20
PROJ NO.	BRS 0149(4)		REV. 1
CUSTOMER:	VT AOT		