148 STRUCTURAL STEEL

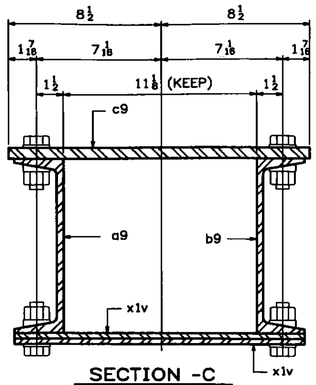


SECTION -C
(TYPICAL PORTAL TOP CHORD SECTION)
(ENLARGED)
(ON 9AB)

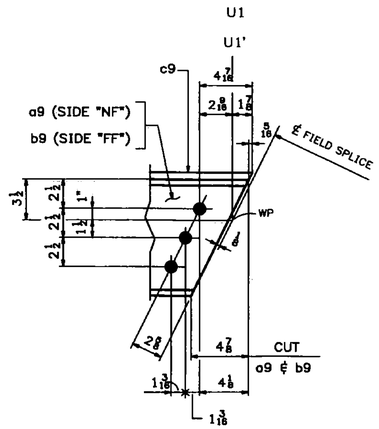


DETAIL "E"
(ENLARGED) (ON 9AB)
(WEB FILL PLATES NOT SHOWN FOR CLARITY)

| ABM INFO | | SHIP | BILL OF MATERIAL | | | | | JOB NO. 454 | DRAWING NO. 9B | REV. |
|---|---|---|---|---|---|---|---|---|---|---|
| PAGE | LINE | MARK | QTY | MARK | MATERIAL | LENGTH FT | LENGTH INCHES | REMARKS | WT | PROCUREMENT NOTES |
| | | 9D1E | 1 | | PORTAL TOP CHORD | | | ALIKE EXCEPT | 2318 | |
| | | 9D9W | 1 | | PORTAL TOP CHORD | | | FOR MARK | 2318 | |
| 3 | B | | 2 | a9 | C 10x20 | 24 | 5 5/16 | (GALVANIZED) M270-50T2 | | |
| 3 | B | | 2 | b9 | C 10x20 | 24 | 5 5/16 | (GALVANIZED) M270-50T2 | | |
| 3 | C | | 2 | c9 | PL 5/8x17 | 24 | 5 7/8 | (GALVANIZED) M270-50T2 | | |
| 2 | P | | 64 | x1v | PL 5/16x2 1/4 | 1 | 8 13/16 | (GALVANIZED) | | |
| 2 | P | | 8 | x1w | PL 5/16x2 1/4 | 1 | 8 1/4 | (GALVANIZED) | | |
| 3 | M | | 4 | x1y | PL 1/8x8 | 2 | 0 5/8 | (GALVANIZED) | | |
| 3 | E | | 2 | x2k | PL 5/16x13 1/2 | 2 | 2 13/16 | (GALVANIZED) | | |
| 3 | F | | 2 | x2m | PL 3/8x18 | 2 | 2 13/16 | (GALVANIZED) | | |
| 3 | J | | 2 | x2w | L 4x4x3/8 | 2 | 8 3/4 | (GALVANIZED) | | |
| 3 | J | | 2 | x2y | L 4x4x3/8 | 2 | 8 3/4 | (GALVANIZED) | | |
| 3 | K | | 2 | x2oc | PL 5/16x17 | 1 | 6 | (GALVANIZED) | | |
| 3 | L | | 4 | x2od | PL 1/2x4 | 1 | 4 7/8 | (GALVANIZED) | | |
| 10 | D | | 28 | | 3/4 ø HSB | 0 | 2 1/4 | (GALVANIZED) A325-1 | | |
| 10 | E | | 20 | | 3/4 ø HSB | 0 | 2 1/2 | (GALVANIZED) A325-1 | | |
| 10 | F | | 264 | | 3/4 ø HSB | 0 | 2 3/4 | (GALVANIZED) A325-1 | | |
| 10 | G | 1 | 20 | | 3/4 ø HSB | 0 | 3 | (GALVANIZED) A325-1 | | |
| 10 | P | | 332 | | 3/4 ø HSW | | | (GALVANIZED) F436 | | |
| 10 | Q | | 332 | | BEVEL WASH FOR 3/4ø HSB | | | (GALVANIZED) F436 | | |

T2 - DENOTES MATERIAL SUBJECT TO CHARPY V-NOTCH TESTING

Vermont Agency of Transportation
RECEIVED
CK'D BY TCF OK'D BY SSS
7:43 am, Apr 12, 2011
RESUBMIT ____ APPROVED X
BY KMH DATE 4-12-11

WORK THIS DWG. WITH DWG. 9AB.

| REV. | DATE | REMARKS | DWN | CHK | APVL | SHOP |
|---|---|---|---|---|---|---|
| 2 | 03/23/11 | REVISED AS PER APPROVAL COMMENTS | JM | PWR | | |
| 1 | 03/02/11 | REVISED AS PER APPROVAL COMMENTS | JM | PWR | | |
| 0 | | | | | | |

MATERIAL: M270-50 (U.N.) | SURFACE PREP. ℄ PAINT: SEE DWG GN1 | HOLES: 13/16 ø(U.N.) | SHOP BOLTS: AS NOTED

DESCRIPTION: PORTAL TOP CHORD 9D1E ℄ 9D9W


CASCO BAY STEEL STRUCTURES, INC.
75 SPRING HILL ROAD SACO, MAINE 04072
PHONE (207) 282-7360 FAX. (207) 282-1179
TENSOR 3015


| | | | |
|---|---|---|---|
| STRUCTURE: | Vermont Route 100A<br>Bridge No. 14<br>Bridgewater<br>County of Windsor | DRAWN: RB | DATE: 9/30/10 |
| | | CHKD: WJL | DATE: 10/19/10 |
| LOCATION: | BRIDGEWATER, VERMONT | JOB NO. | DWG NO. |
| PROJ NO. | BRS 0149(4) | 454 | 9B |
| CUSTOMER: | VT AOT | | REV. 2 |