144 STRUCTURAL STEEL

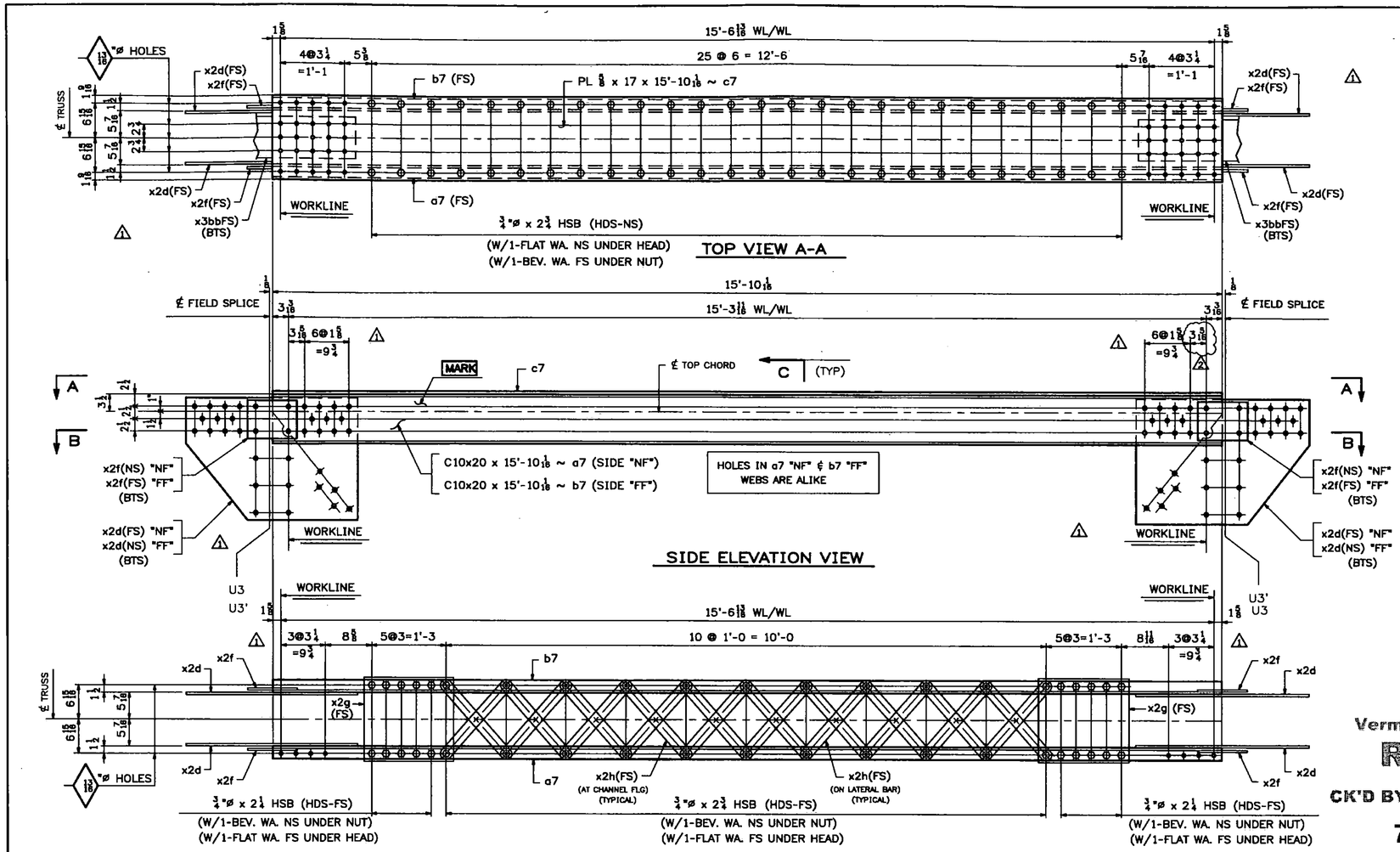

ABM INFO		SHIP	BILL OF MATERIAL					JOB NO. 454	DRAWING NO. 7	REV.
PAGE	LINE	MARK	QTY	MARK	MATERIAL	LENGTH FT	LENGTH INCHES	REMARKS	WT	PROCUREMENT NOTES
		7TC2W	1		TOP CHORD			ALIKE EXCEPT	1882	
		7TC2E	1		TOP CHORD			FOR MARK	1882	
2	C		2	a7	C 10x20	15	10 1/16	(GALVANIZED) M270-50T2		
2	C		2	b7	C 10x20	15	10 1/16	(GALVANIZED) M270-50T2		
2	E		2	c7	PL 5/8x17	15	10 1/16	(GALVANIZED) M270-50T2		
					△1					
2	K		8	x2d	PL 3/8x25	3	0 1/4	(GALVANIZED) M270-50T2		
2	L		8	x2f	PL 5/16x8	0	10	(GALVANIZED) M270-50T2		
2	M		4	x2g	PL 5/16x17	1	6	(GALVANIZED)		
2	P		40	x2h	PL 5/16x2 1/4	1	8 5/8	(GALVANIZED)		
6	R		4	x3bb	PL 5/8x9	2	8 1/2	(GALVANIZED)		
10	D		40		3/4 ø HSB	0	2 1/4	(GALVANIZED) A325-1		
10	F		148		3/4 ø HSB	0	2 3/4	(GALVANIZED) A325-1		
10	P		188		3/4 ø HSW			(GALVANIZED) F436		
10	Q		188		BEVEL WASH FOR 3/4ø HSB			(GALVANIZED) F436		

T2 - DENOTES MATERIAL SUBJECT TO CHARPY V-NOTCH TESTING

Vermont Agency of Transportation
RECEIVED
CK'D BY TCF OK'D BY SSS
7:43 am, Apr 12, 2011
RESUBMIT ____ APPROVED X
BY KMH DATE 4-12-11

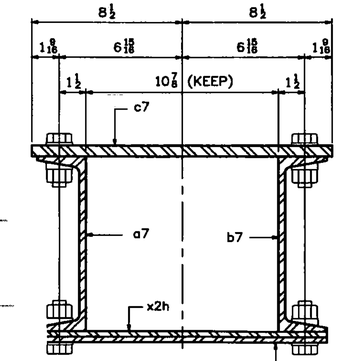

SECTION -C
(TYPICAL CHORD SECTION)
(ENLARGED)

ONE - TOP CHORD - 7TC2W (U3-U3' WEST)
ONE - TOP CHORD - 7TC2E (U3'-U3 EAST)
ALIKE EXCEPT FOR MARK

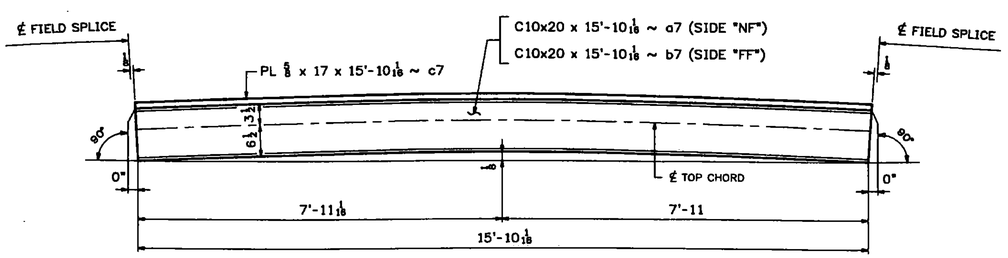

CAMBER DIAGRAM FOR 7TC2W & 7TC2E

SHOP NOTE:
ALL STEEL FOR TOP CHORD ASSEMBLIES SHALL BE GALVANIZED

NOTES:

1. FOR GENERAL NOTES SEE DWG. GN1.
2. FOR STANDARD DETAILS SEE DWG. X2.
3. "NF" - DENOTES NEAR FACE OF ASS'Y.
4. "FF" - DENOTES FAR FACE OF ASS'Y.
5. "BF" - DENOTES BOTH FACES OF ASSEMBLY.
6. ALL BOLTS SHALL BE FULLY TORQUED (UN).
7. BTS - DENOTES BOLT TO SHIP OR SECURE FOR SHIPMENT.
8. HDS - DENOTES BOLT HEADS.

REV.	DATE	REMARKS	DWN	CHK	APVL	SHOP
2	03/23/11	REVISED AS NOTED	JM	PWR		
1	03/02/11	REVISED AS PER APPROVAL COMMENTS	JM	PWR		
0						

MATERIAL: M270-50 (U.N.)	SURFACE PREP. & PAINT: SEE DWG GN1	HOLES: 13/16 ø(U.N.)	SHOP BOLTS: AS NOTED
DESCRIPTION: TOP CHORD 7TC2W & 7TC2E			

CASCO BAY STEEL STRUCTURES, INC.
75 SPRING HILL ROAD SACO, MAINE 04072
PHONE (207) 282-7360 FAX. (207) 282-1179
TENSOR 3015

STRUCTURE: Vermont Route 100A Bridge No. 14 Bridgewater County of Windsor		DRAWN: RB	DATE: 9/29/10
		CHKD: WJL	DATE: 10/18/10
LOCATION: BRIDGEWATER, VERMONT		JOB NO.	DWG NO.
PROJ NO. BRS 0149(4)		454	7
CUSTOMER: VT AOT			REV. 2