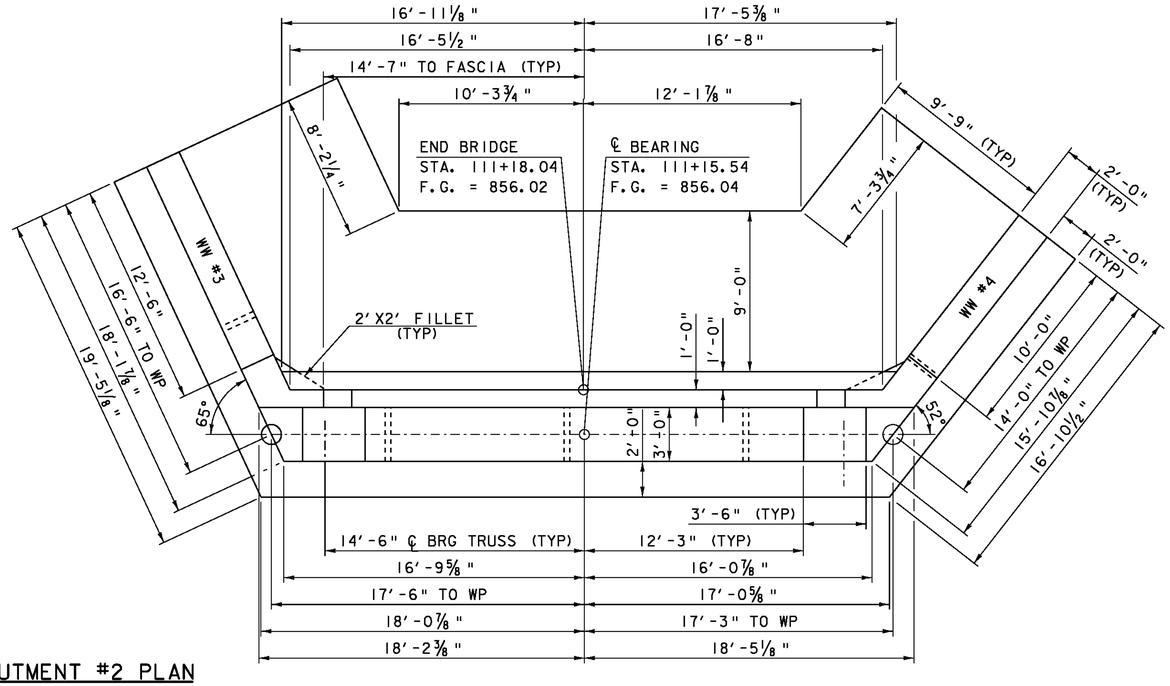

ABUTMENT #2 PLAN

SCALE 1/4" = 1'-0"

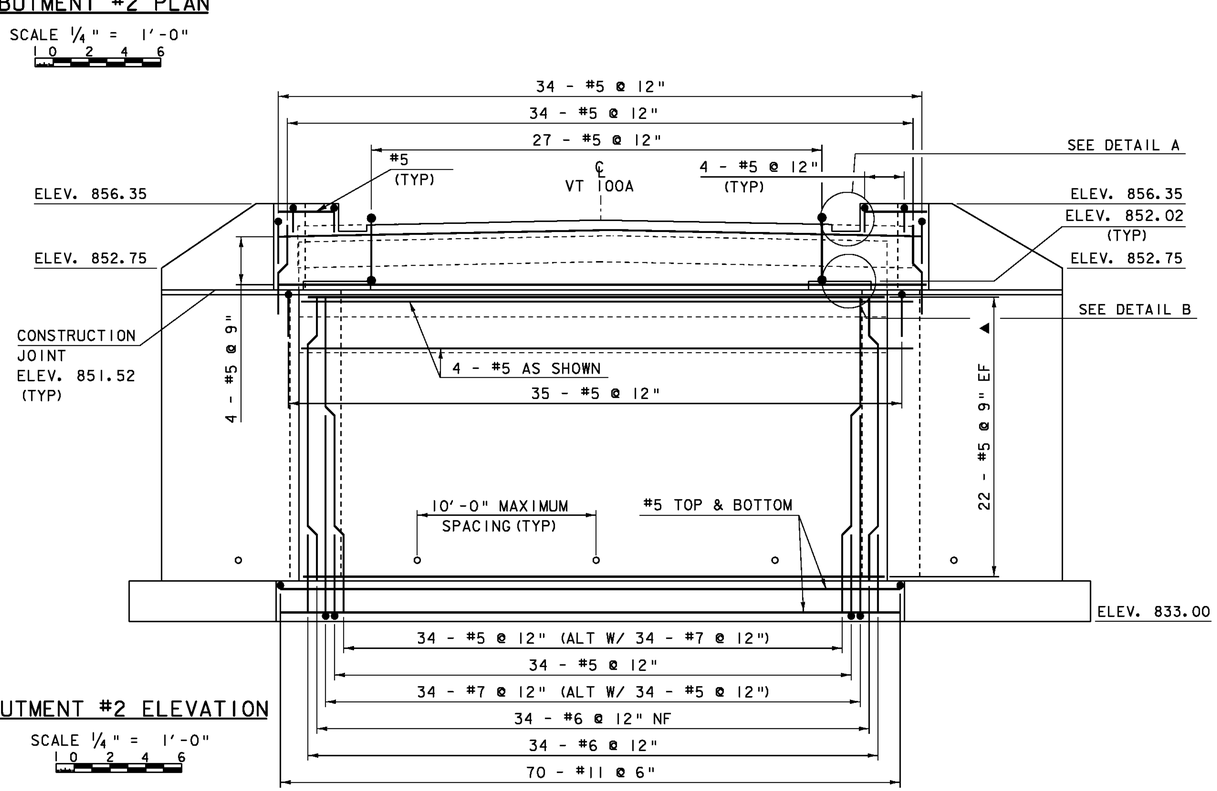

ABUTMENT #2 ELEVATION

SCALE 1/4" = 1'-0"

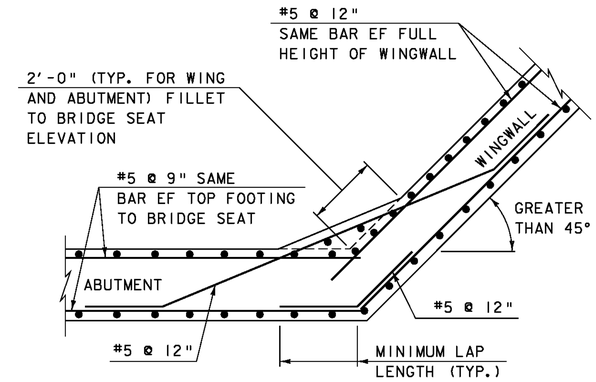

WINGWALL CORNER DETAIL FOR GREATER THAN 45°

NOT TO SCALE

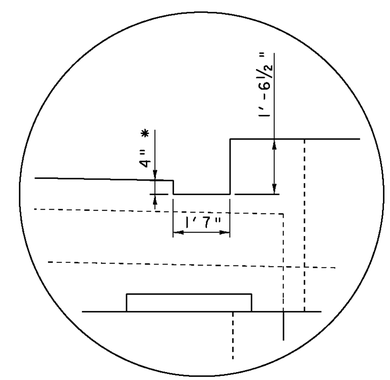

DETAIL A

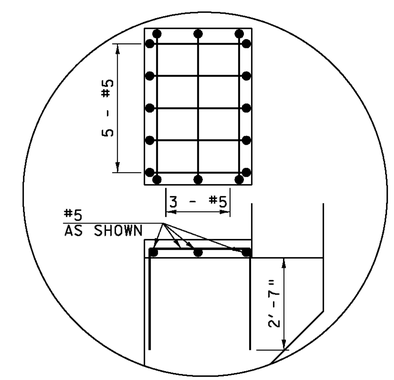

DETAIL B

* DEPTH DEPENDS ON DECK SYSTEM CHOSEN

NOTE:
CONTRACTOR IS RESPONSIBLE FOR DETERMINING THE LENGTHS AND REINFORCING BAR BENDS BASED ON THESE DRAWINGS. ALL LAP LENGTHS SHALL BE AT LEAST THE LENGTH SPECIFIED BELOW:

#5 - 2'-2"
#6 - 2'-7"
#7 - 3'-5"
#8 - 4'-6"
#9 - 5'-8"
#10 - 7'-3"
#11 - 8'-10"

NOTE:
NF = NEAR FACE
FF = FAR FACE
EF = EACH FACE
3" CLEAR, UNLESS OTHERWISE SPECIFIED ON THE PLANS.

PROJECT NAME: BRIDGEWATER	
PROJECT NUMBER: BRS 0149(4)	
FILE NAME: s86e062sub.dgn	PLOT DATE: 31-DEC-2009
PROJECT LEADER: K. HIGGINS	DRAWN BY: R. PELLETT
DESIGNED BY: T. FILLBACH	CHECKED BY: T. FILLBACH
ABUTMENT #2	SHEET 37 OF 58