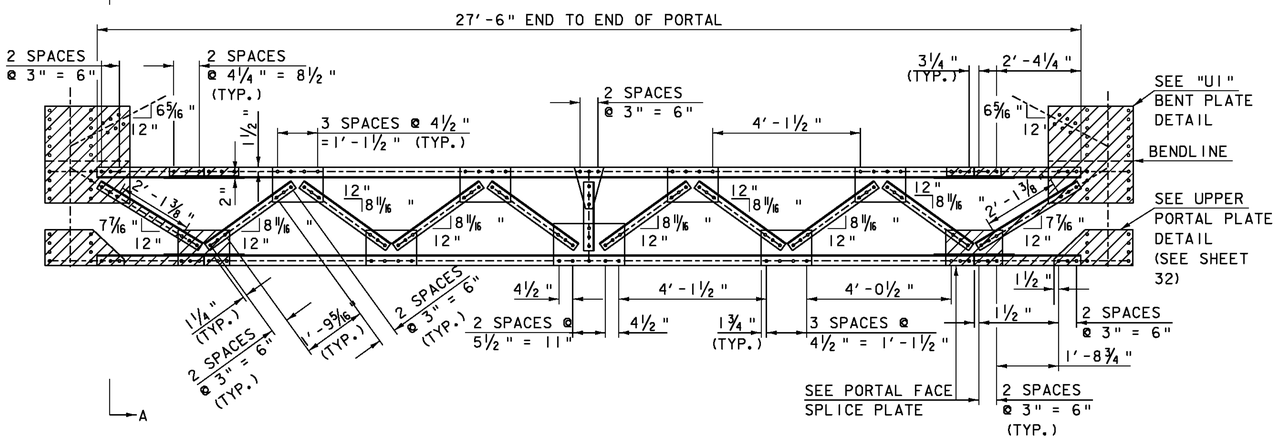

PROFILE VIEW OF PORTAL (FRONT)

SCALE 1/2" = 1'-0"

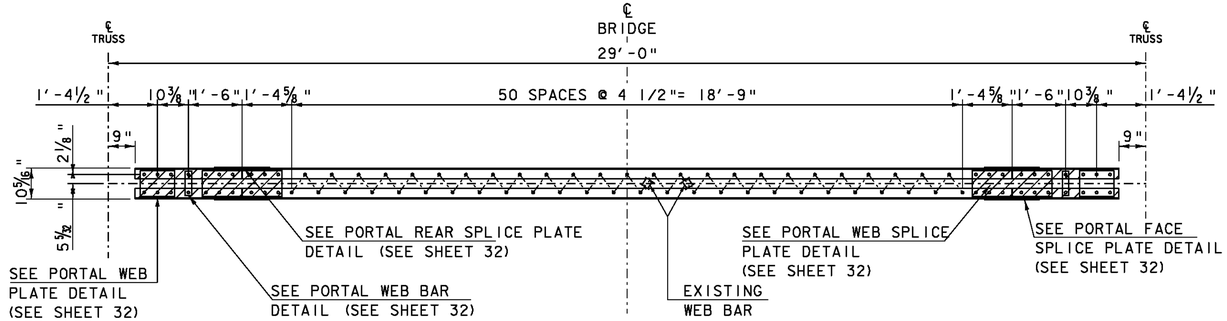

TYPICAL PLAN VIEW OF PORTAL

SCALE 1/2" = 1'-0"

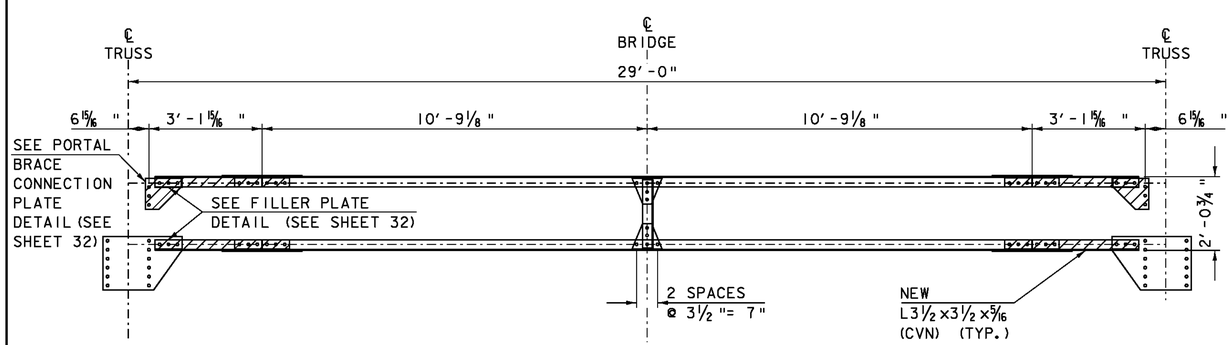

PROFILE VIEW OF PORTAL (REAR)

SCALE 1/2" = 1'-0"

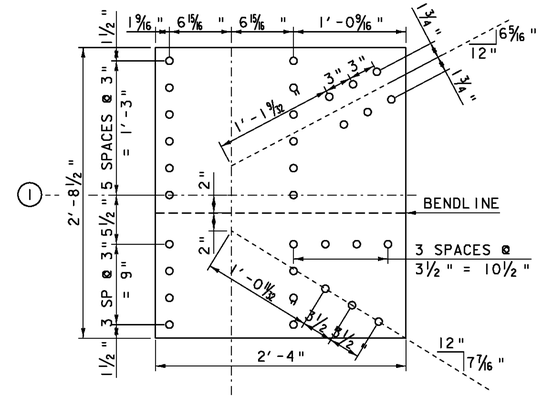

"U1" BENT PLATE DETAIL

PL 3/8 x 28 x 2'-8 1/2"

SCALE 1 1/2" = 1'-0"

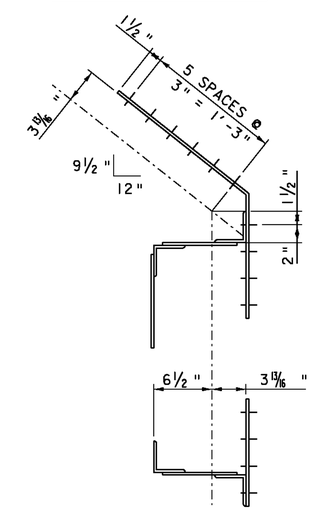

SECTION A-A

SCALE 1 1/2" = 1'-0"

NOTE:
1. HATCHED COMPONENTS ARE NEW
2. 3/4" DIAMETER BOLTS IN 13/16" HOLE, UNLESS OTHERWISE NOTED.
3. MINIMUM BOLT EDGE AND DISTANCE = 1 1/2", UNLESS OTHERWISE NOTED.

PROJECT NAME: BRIDGEWATER	
PROJECT NUMBER: BRS 0149(4)	
FILE NAME: s86e062roof.dgn	PLOT DATE: 31-DEC-2009
PROJECT LEADER: K. HIGGINS	DRAWN BY: C. MOONEY
DESIGNED BY: T. FILLBACH	CHECKED BY: T. FILLBACH
PORTAL FRAME	SHEET 31 OF 58