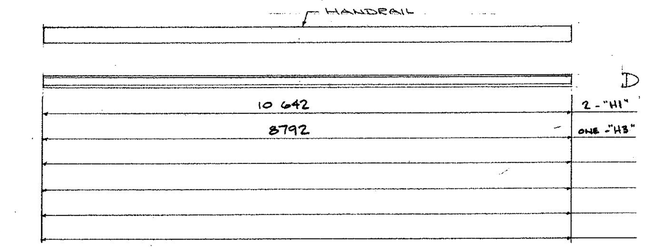

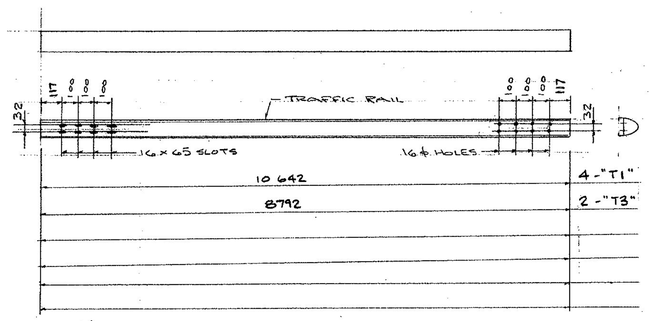

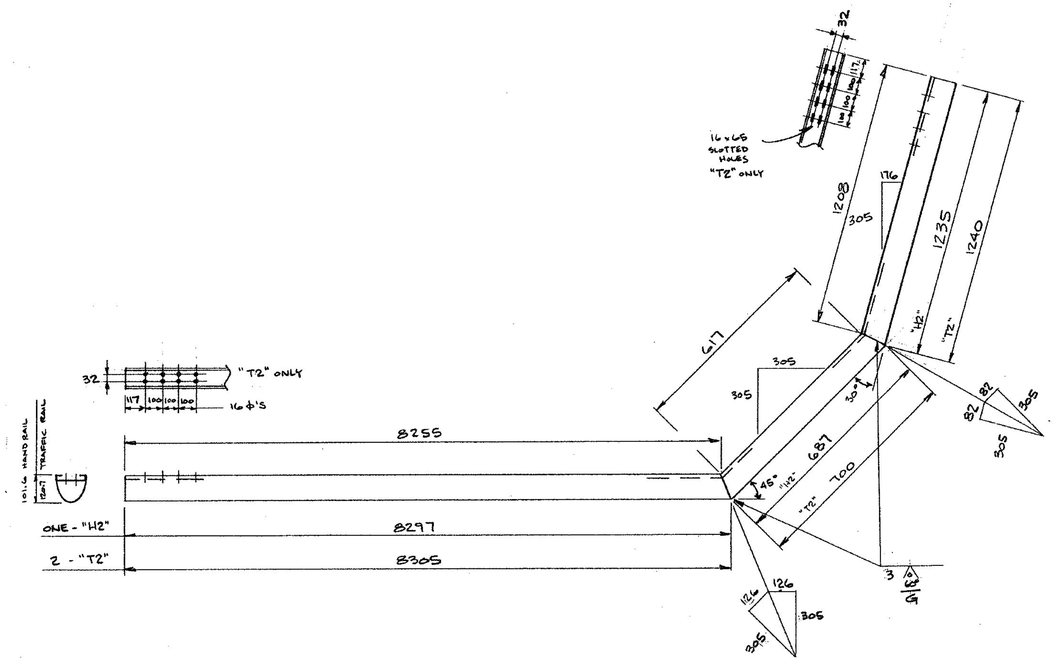

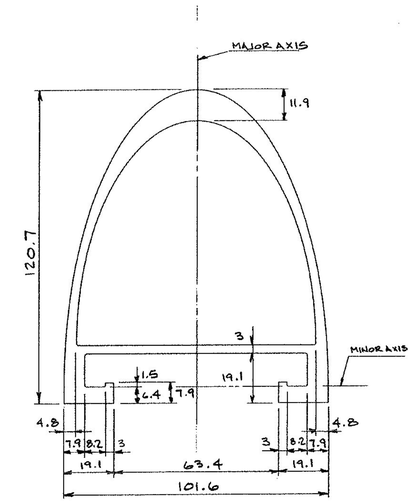

TRAFFIC RAIL EXTRUSION
FULL SIZE

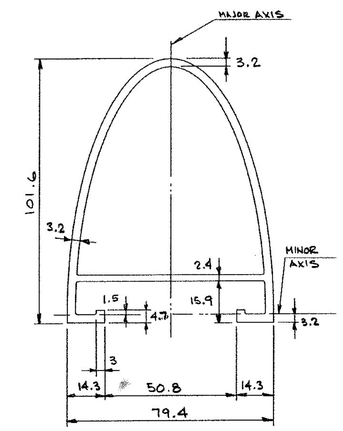

HANDRAIL EXTRUSION - FULL SIZE

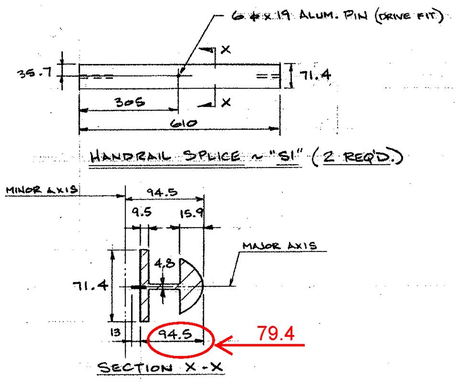

HANDRAIL SPLICE ~ "S1" (2 REQ'D.)

SECTION X-X

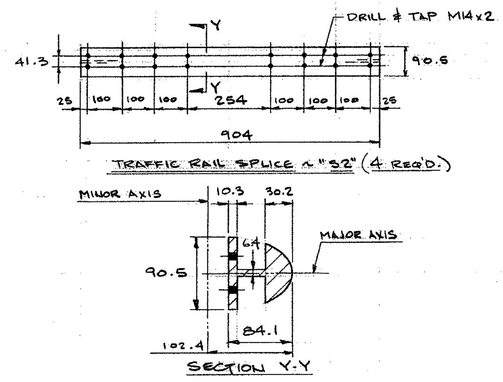

TRAFFIC RAIL SPLICE ~ "S2" (4 REQ'D.)

SECTION Y-Y

Received Date: 6/1/11
Checked By: Hiram Salls
Reviewed By: Rob Young
Approval Type: Approved As Noted
Approved By: Chris Williams
Date: 6/13/11

ISSUE	DATE	DESCRIPTION	BY
1	5-25-11	FOR APPROVAL	

DIM'S ARE GIVEN IN MILLIMETER'S

AUCIELLO IRON WORKS INC
560 MAIN ST. HUDSON, MA (978) 568-8382

VT. AGENCY OF TRANSPORTATION
EAST MONTPELIER, VT
VT RT 14, BRIDGE # 17
BRF 037-2 (8)

AL. BRIDGE & APPROACH RAILING

SURFACE PREP: NONE
FINISH: MILL

FOR: F.R. LAFAYETTE, INC
DR: 3/14/2011
CHK: 5-25-11
JOB NO. AB17044-1001
DWG. NO. B2-3006
SHEET 1-F2 OF

AL. MASTERFACE INC. 100818