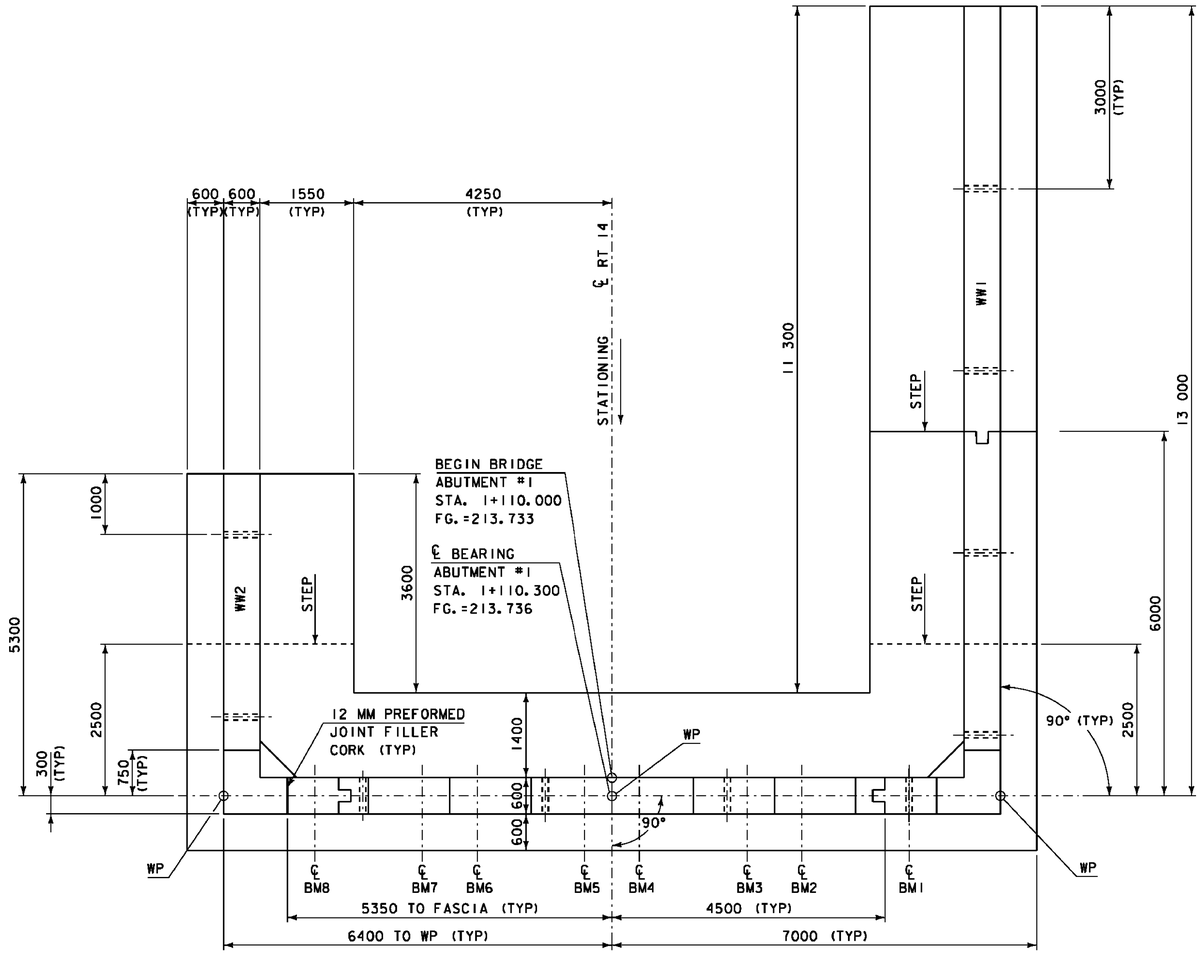

ABUTMENT #1 PLAN VIEW

SCALE 1:50

FLOW

SEE REVISED SHEET 28A

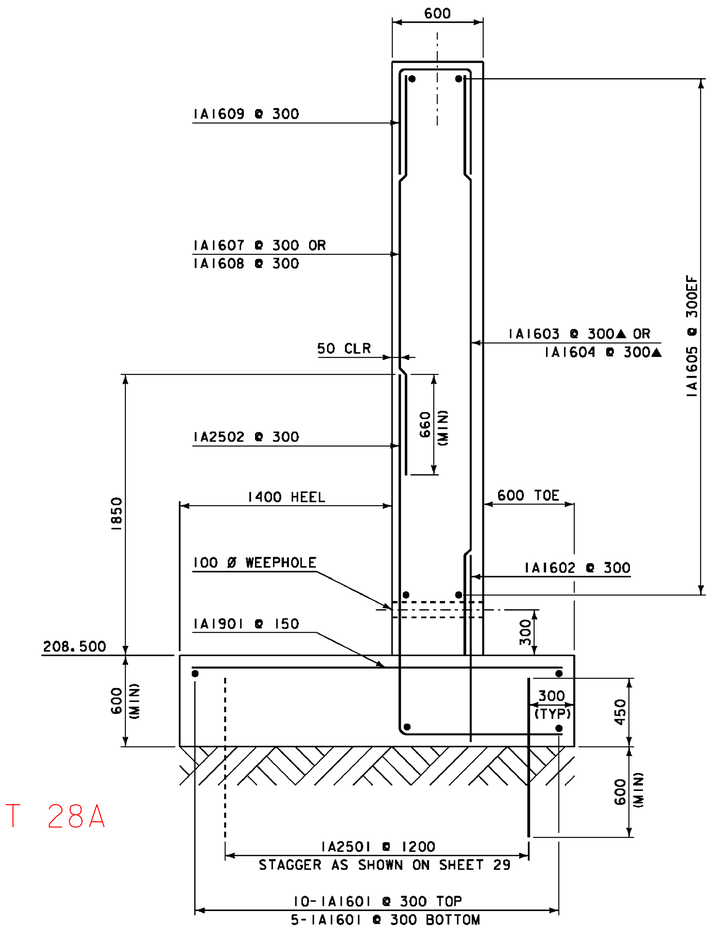

ABUTMENT #1 TYPICAL SECTION

SCALE 1:20

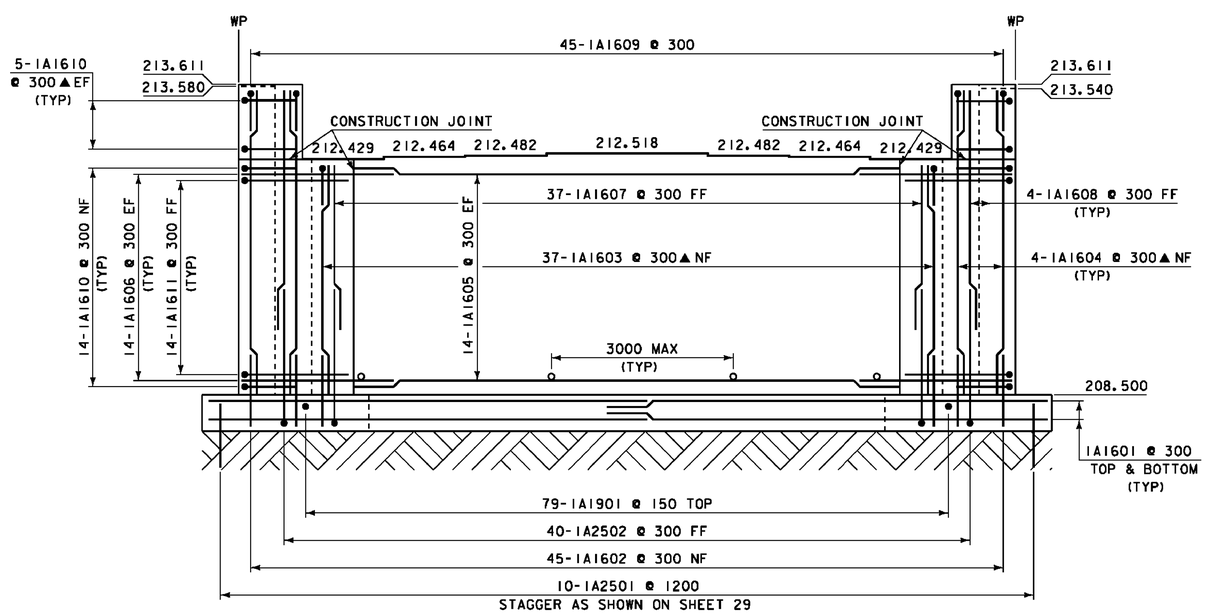

ABUTMENT #1 ELEVATION

SCALE 1:50

0 1 2

SCALE = 1:20

0 1 2 3 4 5

SCALE = 1:50

NOTE:

NF = NEAR FACE
FF = FAR FACE
EF = EACH FACE
▲ = CUT TO FIT IN FIELD

80 CLR. UNLESS OTHERWISE SPECIFIED ON THE PLANS.

ALL LAPS ARE 660 MIN UNLESS OTHERWISE SPECIFIED ON THE PLANS.

PROJECT: EAST MONTPELIER	PROJECT NO.: BRF 037-2 (8)
DESIGN FILE NAME: 86e054\Structures\se054sub	
IPARM FILE NAME: se054abut1.i	PLOT DATE: 18-AUG-2010
DESIGNED BY: L.J. STONE	DRAWN BY: D.D. BEARD
SQUAD LEADER: C.P. WILLIAMS	CHECKED BY: H.I. SALLS
ABUTMENT 1 DETAILS	SHEET: 28 OF 63