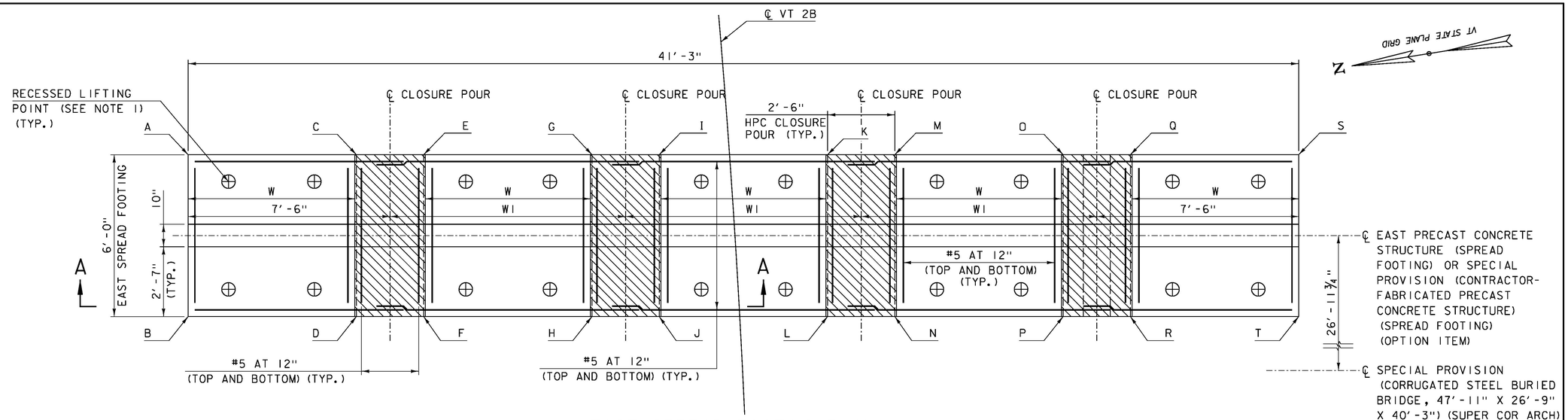

EAST SPREAD FOOTING PLAN

SCALE: ½″ = 1′-0″

SPECIAL PROVISION (HIGH PERFORMANCE CONCRETE, RAPID SET) (FPQ) (TYP.)

SPREAD FOOTING DIMENSIONS

W	6.25
W1	8.75

SPREAD FOOTING ELEVATIONS

	STATION	OFFSET	TOP OF FOOTING ELEVATION	BOTTOM OF FOOTING ELEVATION
A	63+15.69	-20.06	666.58	664.58
B	63+09.37	-20.46	666.58	664.58
C	63+15.21	-13.83	666.58	664.58
D	63+08.99	-14.22	666.58	664.58
E	63+15.02	-11.33	666.58	664.58
F	63+08.84	-11.72	666.58	664.58
G	63+14.55	-5.10	666.58	664.58
H	63+08.48	-5.48	666.58	664.58
I	63+14.37	-2.61	666.58	664.58
J	63+08.34	-2.99	666.58	664.58
K	63+13.93	3.63	666.58	664.58
L	63+07.99	3.25	666.58	664.58
M	63+13.76	6.12	666.58	664.58
N	63+07.86	5.75	666.58	664.58
O	63+13.33	12.36	666.58	664.58
P	63+07.53	11.99	666.58	664.58
Q	63+13.17	14.85	666.58	664.58
R	63+07.40	14.49	666.58	664.58
S	63+12.76	21.09	666.58	664.58
T	63+07.09	20.73	666.58	664.58

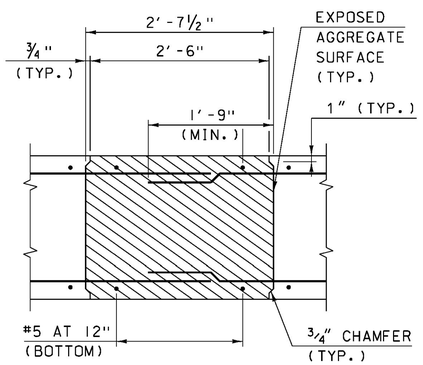

JOINT DETAIL SECTION

SCALE: 1″ = 1′-0″

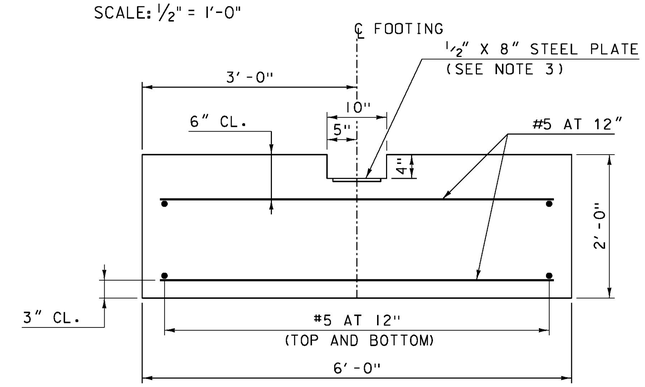

FOOTING TYPICAL MASONRY AND REINFORCING SECTION

SCALE: 1″ = 1′-0″

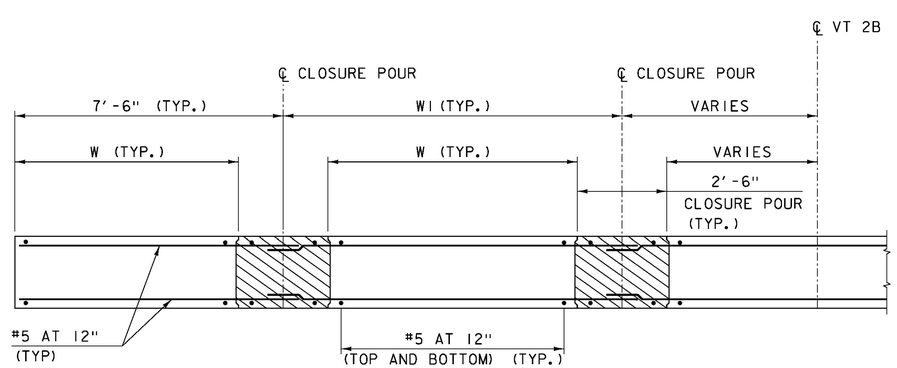

SECTION A-A

SCALE: ½″ = 1′-0″

NOTES:

1. FABRICATOR TO DESIGN CONCRETE SPREAD FOOTING AND LIFTING POINTS AND LOCATIONS FOR ERECTION STRESSES AND INCLUDE CALCULATIONS WITH SUBMITTAL. SEE NOTE 37 ON SHEET 10.
2. 2″ CLEAR UNLESS OTHERWISE NOTED ON THE PLANS.
3. SEE SHEET 36 FOR FOOTING CONNECTION DETAIL.

PROJECT NAME: ST. JOHNSBURY
PROJECT NUMBER: BF 7000(20)

FILE NAME: 86e048/cos/z86e048sub.dgn
PROJECT LEADER: J.BYATT
DESIGNED BY: A. GIRALDI
SPREAD FOOTINGS DETAILS SHEET 2
PLOT DATE: 10/26/2016
DRAWN BY: M.SMITH
CHECKED BY: S.BEAUMONT
SHEET 42 OF 70

CLD 14-0116 MODEL: SUB13