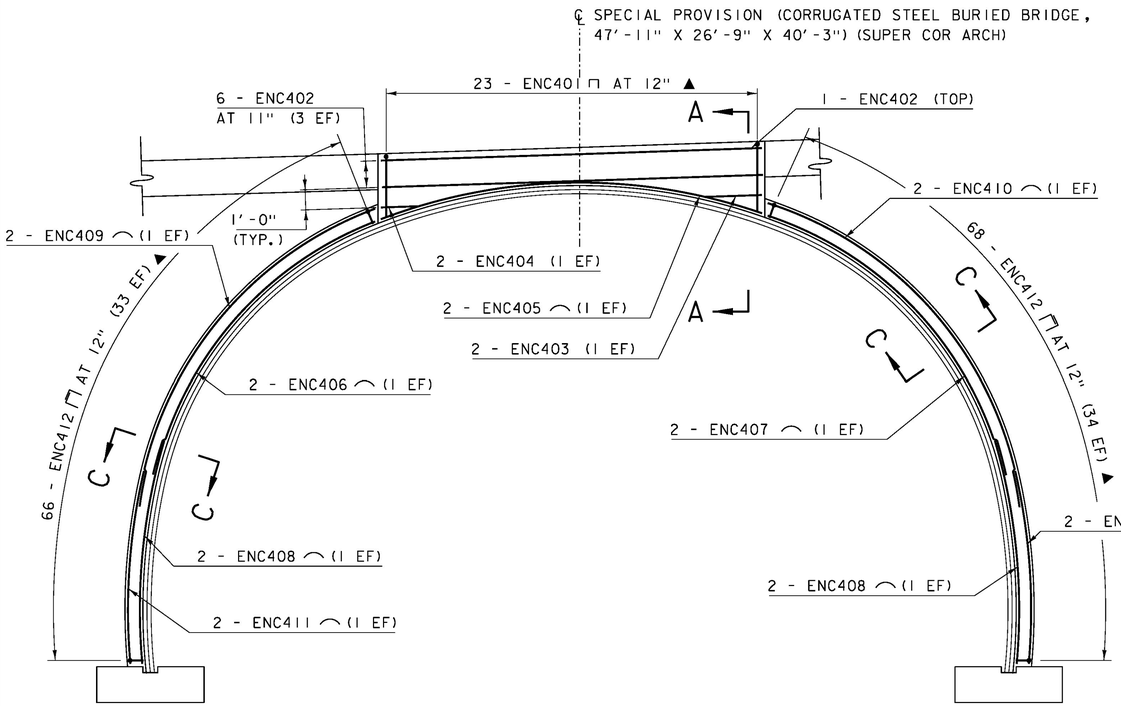

NORTH CAST-IN-PLACE CONCRETE COLLAR
AND COLLAR/WALL CAP COMBINATION REINFORCING ELEVATION

SCALE: 1/4" = 1'-0"

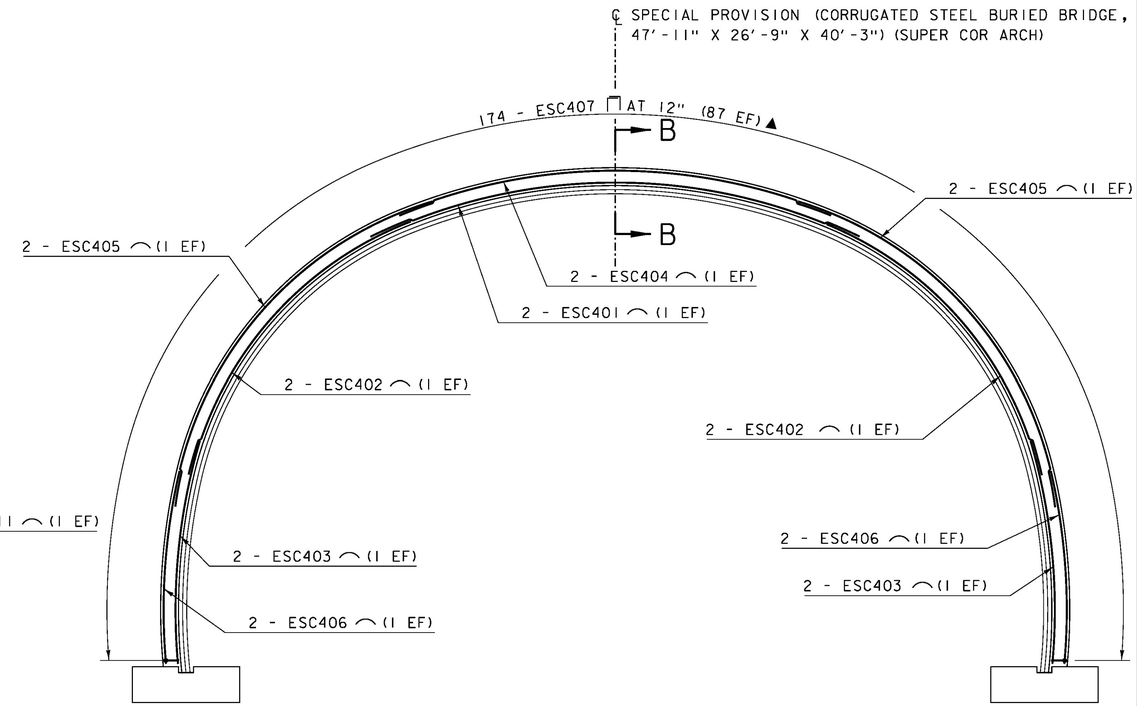

SOUTH CAST-IN-PLACE CONCRETE COLLAR REINFORCING ELEVATION

SCALE: 1/4" = 1'-0"

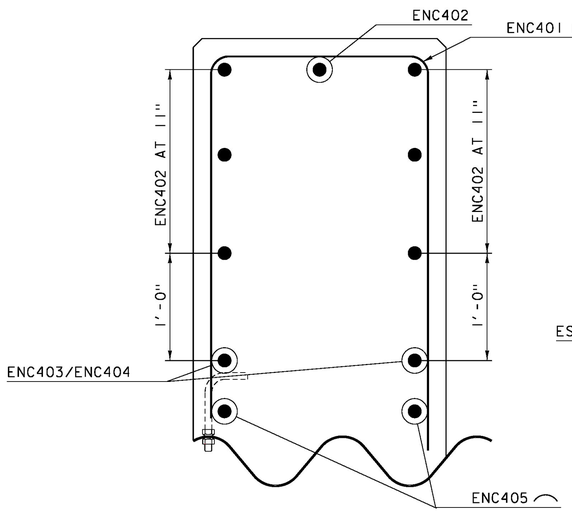

SECTION A-A

SCALE: 1 1/2" = 1'-0"

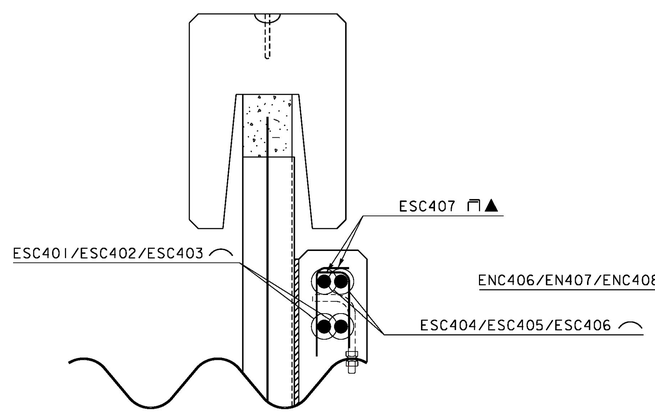

SECTION B-B

SCALE: 1 1/2" = 1'-0"

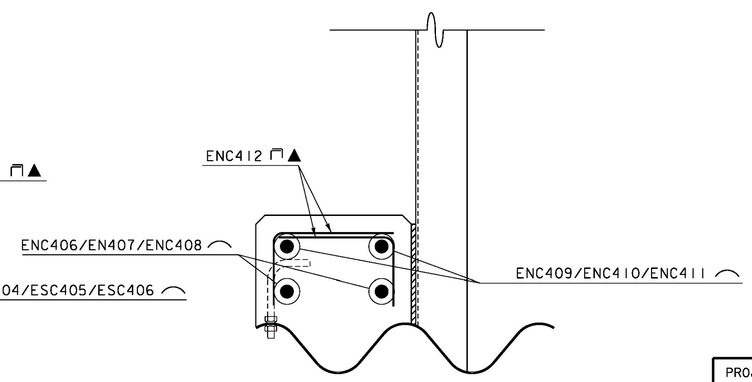

SECTION C-C

SCALE: 1 1/2" = 1'-0"

NOTES:
NF = NEAR FACE
FF = FAR FACE
EF = EACH FACE
2" CLEAR, UNLESS OTHERWISE SPECIFIED ON THE THE PLANS.
1'-11" BAR LAP UNLESS OTHERWISE SPECIFIED ON THE PLANS

PROJECT NAME: ST. JOHNSBURY	
PROJECT NUMBER: BF 7000(20)	
FILE NAME: 86e048/cos/z86e048sub.dgn	PLOT DATE: 10/26/2016
PROJECT LEADER: J.BYATT	DRAWN BY: M.SMITH
DESIGNED BY: S. BEAUMONT	CHECKED BY: A. GIRALDI
STRUCTURE DETAILS SHEET 3	SHEET 37 OF 70

CONSULTING ENGINEERS

CLD 14-0116 MODEL: SUB08