HIGHWAY FEDERAL AID SHEET
PLATE 3-FULL CROSS SECTION-FULL LINE
NATIONAL PRINTING
PRINTED IN U.S.A.

DR# (73) 50+30 RT ~ 49+40 RT 18" CPEP 86'

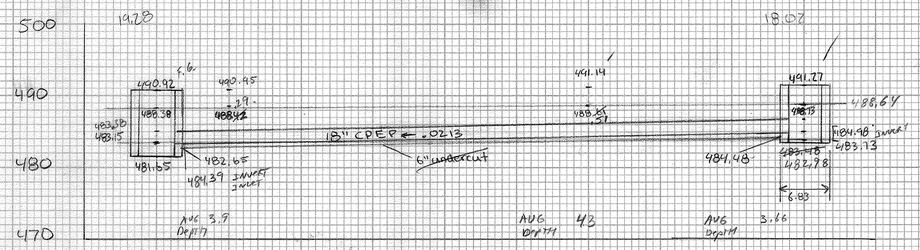

$\left(3.75 \times \left(\frac{4.1+4.3}{2}\right) \times 58\right) + \left(3.75 \times \left(\frac{4.3+3.66}{2}\right) \times 27\right) = \frac{1294.75}{27} = 47.96$ cy TE

Exc. Trench earth from pipe Area Outlet $(.5 \times 3.75) + (.73 \times 1.5 \times 3.75) = 22.86$; Inlet $(4.25 \times 3.75) = 15.44$ vol. $\frac{(15.44+22.86)}{2} \times 83.4 \times 1/27 = 59.92$ cy + 7.31 cy = 67.23 RD 7/3/07

56.10 cy ✓ TOTAL TE

DI @ 50+30 Area $(3.14 \times 3.42^2) = 36.73$ vol. $\frac{(36.73 \times 5)}{27} + (36.73 \times .66 \times 1.5) = 8.15$ cy

Granular Backfill

$(3.75 \times 1.38 \times 83.4) = 431.60$ ft³ 27 = 16.00 cy

$(3.14 \times .88^2 \times 83.4) = 255.25$ ft³ 27 = 9.46 cy

331.35 / 27 = 12.27 cy RD 7/3/07

184.62 / 27 = 6.85 cy

176.11 / 27 = 6.52 cy

PAY 88 LF

12/11/07

TBG 1/24/08

DR# (74) 50+44 RT ~ 50+30 RT 18" CPEP 20'

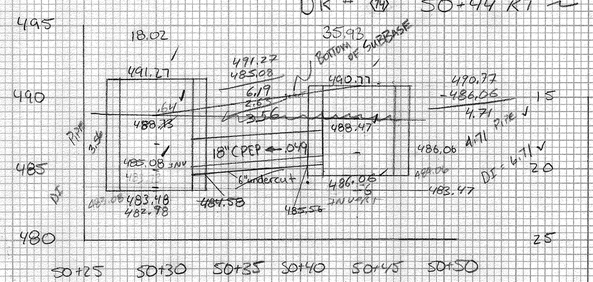

Trench Exc of Earth

Pipe $= \frac{(3.56+4.71)}{2} \times 3.75 \times \frac{19.3}{27} = 11.08$ cy

CB @ 50+44 $= \frac{(5 \times \pi \times 3.42^2) + (1.7 \times 1.5 \times \pi \times 3.42^2)}{27} = 10.30$ cy

$\Sigma = 21.38$ cy

12/24/08

TBG 1/24/08

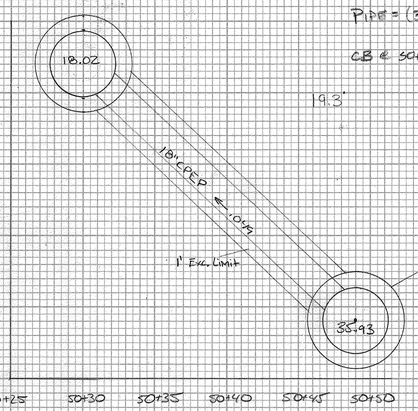

Exc Trench earth from pipe Area Outlet $(4.15 \times 3.75) = 15.56$; Inlet $(2.47 \times 5.13) = 12.67$; 28.23

vol $(15.56 + 10.94) \times 19.3 \times 1/27 = 9.76$ cy

$(12.67 + 12.67) \times 19.3 = 9.32$ cy

14.78 cy RD 07/06/07

DI @ 50+44 Area $(3.14 \times 3.42^2) = 36.73$

vol $(36.73 \times 3.511) \times 1/27 = 5.32$ cy

$36.73 \times .66 \times 1/27 = 6.8$ cy

$36.73 \times 1.71 \times 1.5 = 3.49$ cy

10.27 cy

Granular Backfill

$(3.75 \times 1.38 \times 19.3) = 99.88$ ft³

$(3.14 \times .88^2 \times 19.3) = 23.77$ ft³

$\Sigma = 123.65$

76.41 / 27 = 2.83 cy RD 07/06/07

42.41 / 27 = 1.57 cy

12/11/07

IBG 1/24/08

DR # 75 35+00 RT ~ 35+35 LT (Goodreau St.) 18"

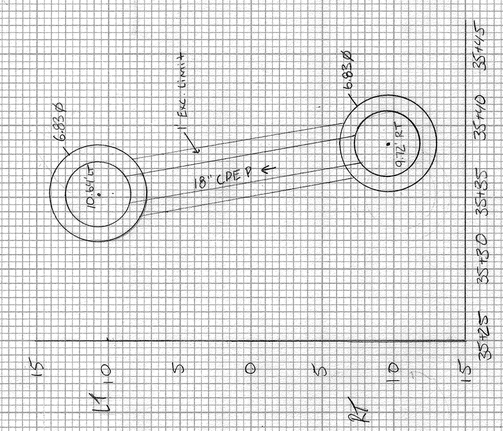

ORIGINAL SURVEY — SURVEYED, PLOTTED, TRIANGULATE, AREAS, AREAS CHECKED, NOTE BOOK NO., BY, DATE

FINAL SURVEY — SURVEYED, PLOTTED, TRIANGULATE, AREAS, AREAS CHECKED, NOTE BOOK NO., BY, DATE

* SEE 7 1/1ER CADD Sheet 5

50 SCALE

SHEET #30

SHEET #32