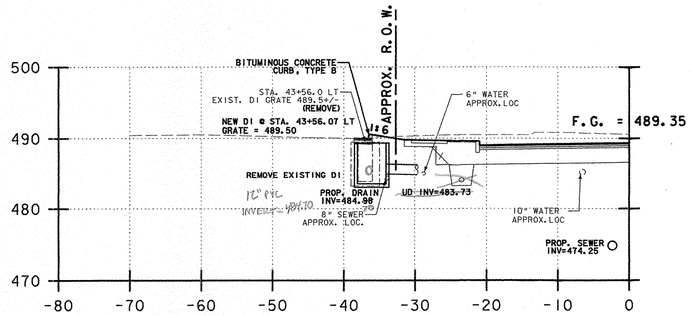

43+56.07

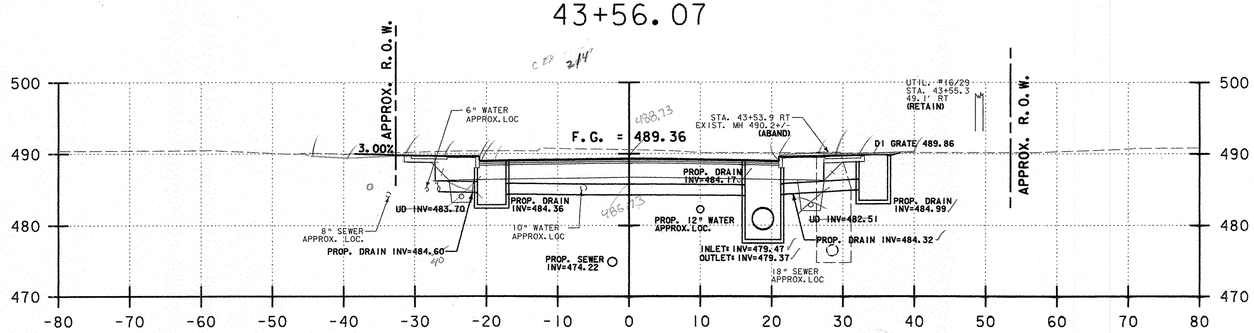

43+50.00

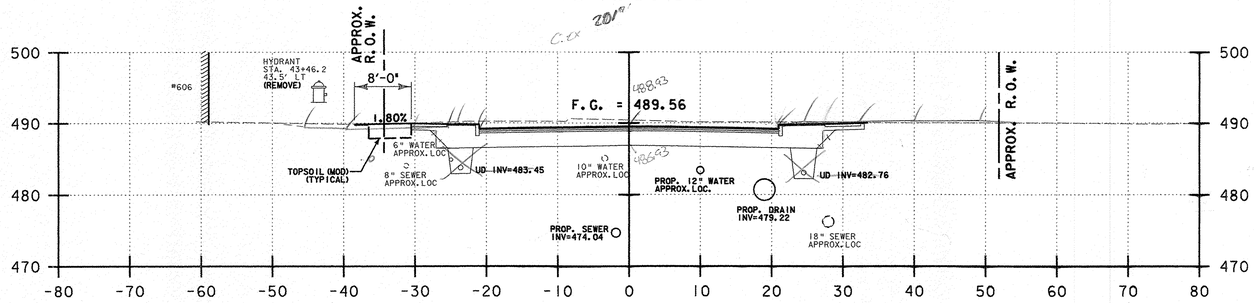

43+00.00

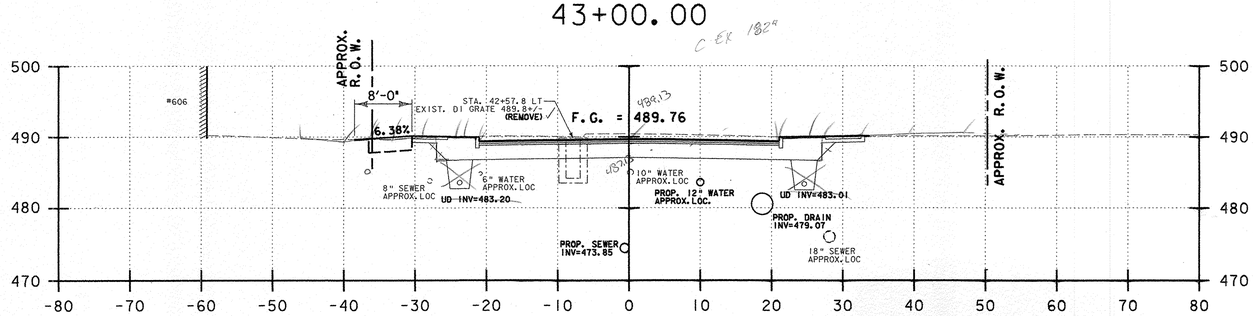

42+50.00

NOTES:

1) REFER TO ROADWAY LAYOUT AND UTILITY LAYOUT SHEETS FOR PROPOSED ABANDONMENT, REMOVAL, OR PROTECTION REQUIREMENTS OF EXISTING UTILITIES IN CONFLICT WITH PROPOSED WORK.

U.S. ROUTE 5
HARTFORD AVENUE

PROJECT NAME: HARTFORD	
PROJECT NUMBER: RS 0113(40)	
FILE NAME: z86c027xsl.dgn	PLOT DATE: 1/11/2007
PROJECT LEADER: KEN UPMAL	DRAWN BY: E. ATKINS
DESIGNED BY: K. ISHIKURA, E. ATKINS	CHECKED BY: K. ISHIKURA
	SHEET 209 OF 239