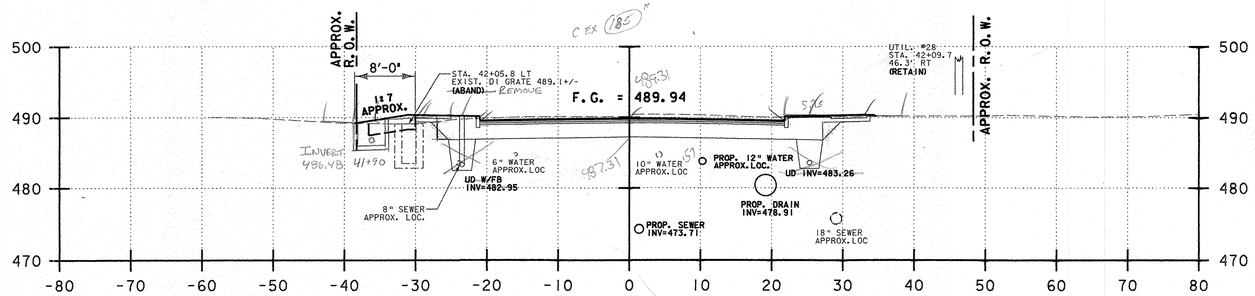

42+00.00

27'
SUBBASE 122.29 S.F. BL 3/23/10
COMMON = 170.0 SF RCD 1/11/11
F.G. = 54.0 LF CGB 01/11/11
RCD 1/24/11

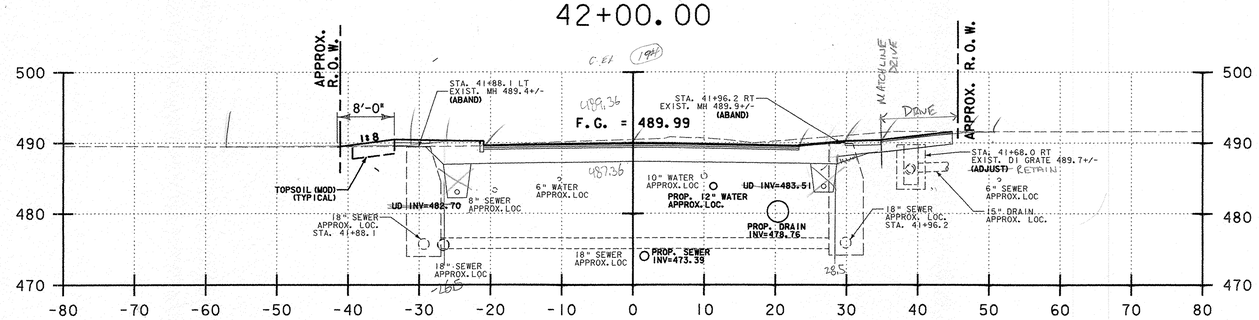

41+50.00

SUBBASE 130.81 SF BL 3/23/10 CGB 01/11/11
COMMON = 188.7 SF RCD 1/11/11
F.G. = 55.0 LF RCD 1/24/11
CGB 01/24/11

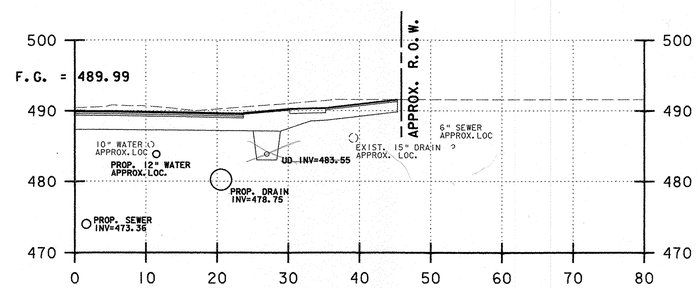

41+41.83 DRIVEWAY
ASKEW 7°28'39.2" LT

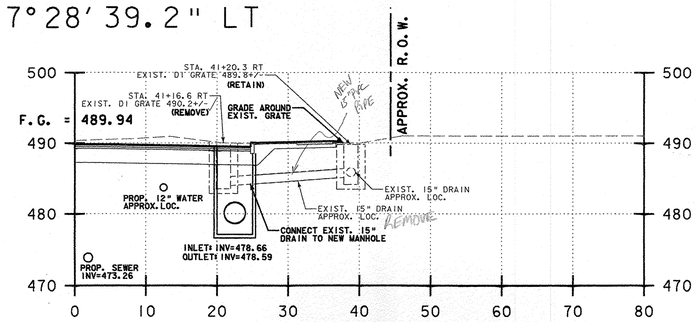

41+16.36

NOTES:

1) REFER TO ROADWAY LAYOUT AND UTILITY LAYOUT SHEETS FOR PROPOSED ABANDONMENT, REMOVAL, OR PROTECTION REQUIREMENTS OF EXISTING UTILITIES IN CONFLICT WITH PROPOSED WORK.

U.S. ROUTE 5
HARTFORD AVENUE

PROJECT NAME: HARTFORD	
PROJECT NUMBER: RS 0113(40)	
FILE NAME: z86c027xsl.dgn	PLOT DATE: 1/11/2007
PROJECT LEADER: KEN UPMAL	DRAWN BY: E. ATKINS
DESIGNED BY: K. ISHIKURA, E. ATKINS	CHECKED BY: K. ISHIKURA
	SHEET 208 OF 239