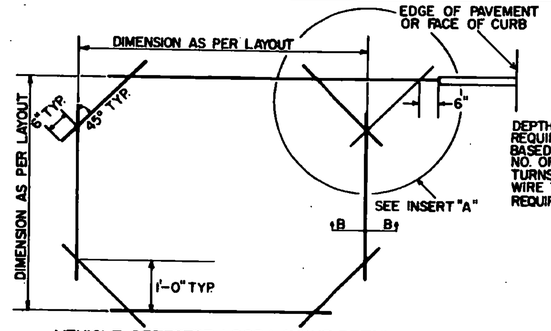

VEHICLE DETECTOR LOOP LAYOUT DETAIL

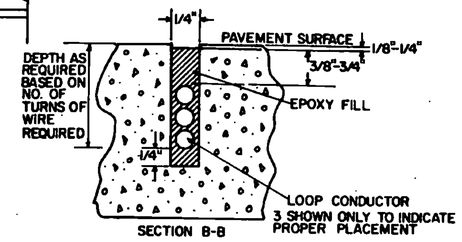

SECTION B-B

LOOP SLOT DETAIL

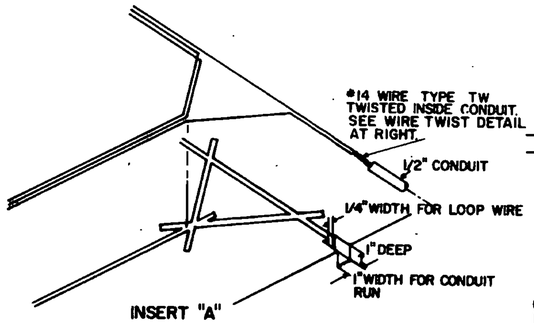

INSERT "A"

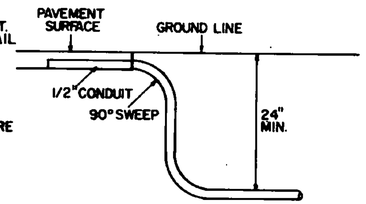

CONDUIT DETAIL FOR LOOP LEAD-IN TO CONTROLLER/PULL BOX

WIRE TWIST DETAIL
MINIMUM 2 TO 5 TWISTS PER FOOT.
CLOCKWISE & COUNTERCLOCKWISE TWISTS ALTERNATING ARE ACCEPTABLE.

RECTANGULAR LOOPS
VEHICLE DETECTOR LOOP INDUCTANCE DESIGN TABLE

SHORTER DIMENSION OF LOOP: 6 FEET LARGER LOOP DIM. (FT)	6 FEET LARGER LOOP AREA (SQ.FT)	8 FEET LARGER LOOP DIM. (FT)	8 FEET LARGER LOOP AREA (SQ.FT)	10 FEET LARGER LOOP DIM. (FT)	10 FEET LARGER LOOP AREA (SQ.FT)	12 FEET LARGER LOOP DIM. (FT)	12 FEET LARGER LOOP AREA (SQ.FT)	LOOP PERIMETER (FT)	LOOP INDUCTANCE (MICROHENRIES) 1 TURNS K=.45	2 TURNS K=.42	3 TURNS K=.38	4 TURNS K=.36
6	36	—	—	—	—	—	—	24	11	40	82	138
8	48	—	—	—	—	—	—	28	13	47	96	161
10	60	8	64	—	—	—	—	32	14	54	109	184
12	72	10	80	—	—	—	—	36	16	60	123	207
14	84	12	96	10	100	—	—	40	18	67	137	230
16	96	14	112	12	120	—	—	44	20	74	151	254
18	108	16	128	14	140	12	144	48	22	81	164	277
20	120	18	144	16	160	14	168	52	23	87	178	300
22	132	20	160	18	180	16	192	56	25	94	192	323
24	144	22	176	20	200	18	216	60	27	101	205	346
26	156	24	192	22	220	20	240	64	29	108	219	369
28	168	26	208	24	240	22	264	68	31	114	232	392
30	180	28	224	26	260	24	288	72	32	121	246	415
32	192	30	240	28	280	26	312	76	34	128	260	438
35	210	33	264	31	310	29	348	82	37	139	280	472
40	240	38	304	36	360	34	408	92	41	155	315	530
45	270	43	344	41	410	39	468	102	46	172	349	588
50	300	48	384	46	460	44	528	112	50	188	383	—
55	330	53	424	51	510	49	588	122	55	205	417	—
60	360	58	464	56	560	—	—	132	59	222	451	—
70	420	68	544	—	—	—	—	152	68	256	520	—
80	480	—	—	—	—	—	—	172	77	289	588	—
90	540	—	—	—	—	—	—	192	86	323	—	—
100	600	—	—	—	—	—	—	212	95	356	—	—

NOTE 1: TO THE ABOVE LOOP INDUCTANCES, ADD 25 MICROHENRIES FOR EACH 100 FEET OF LEAD-IN CABLE FROM THE PAVEMENT LOOP TO THE DETECTOR CABINET. LOOP FEEDER LENGTH SHALL NOT EXCEED 750 FEET FOR A SINGLE OR MULTIPLE LOOP SYSTEM.

2: THE INDUCTANCE FORMULA USED FOR THE TABLE ABOVE IS $L=KPN^2$, WHERE $K=\frac{6}{10^9 H}$. THIS IS THE MARYLAND-ILLINOIS FORMULA FROM A REPORT ON VEHICLE DETECTORS, BY KLATT (1973)

3: WHEN LOOPS ARE CONNECTED IN SERIES, THE TOTAL INDUCTANCE BECOMES THE SUM OF ALL INDUCTANCES. WHEN LOOPS ARE CONNECTED IN PARALLEL (PREFERRED DESIGN) THE COMBINED INDUCTANCE WILL EQUAL THE PRODUCT OF THE INDUCTANCES DIVIDED BY THE SUM, PLUS THE LOOP FEEDER INDUCTANCES.

VEHICLE DETECTOR LOOP NOTES

1) THE TERM "VEHICLE DETECTOR LOOP" SHALL REFER TO THE SENSOR ELEMENT IMBEDDED IN THE PAVEMENT WHICH SENSES VEHICLE PASSAGE OR PRESENCE. THE TERM "CABINET AMPLIFIER" SHALL REFER TO THE ELECTRICAL OR ELECTRONIC DEVICE LOCATED IN THE CONTROL CABINET WHICH RESPONDS DIRECTLY TO A VEHICLE ACTUATION AND INTERFACES WITH THE CONTROLLER.

2) WHEN THE DISTANCE FROM THE VEHICLE DETECTOR LOOP TO THE CONTROLLER EXCEEDS 250 FEET, 12 AWG WIRE SHALL BE USED FOR THE FEEDER WIRE. BELDEN SHIELDED CABLE SHALL BE USED TO EXTEND LOOP LEAD-INS TO THE CONTROLLER CABINET.

3) THE VEHICLE DETECTOR LOOPS SHALL BE INSTALLED IN SUCH A WAY AS TO MAXIMIZE SENSITIVITY AND SHALL BE CAPABLE OF DETECTING MOTORCYCLES AND BICYCLES. WHILE ELIMANATING, FALSE CALLS FROM VEHICLES IN ADJACENT LANES. LOOPS ARE DESIGNED SO THAT THE LOOPS AND FEEDER LINES TOTAL INDUCTANCE THAT EXISTS AT THE AMPLIFIER IS AT THE CENTER OF RANGE WITH REGARD TO INDUCTANCE (DESIGN VALUE OF 350 MICROHENRIES, ASSUMED). INDUCTANCE AND CAPACITANCE MEASUREMENTS SHALL BE TAKEN AND RECORDED PRIOR TO AND AFTER THE SAW SLOTS ARE SEALED.

4.) THE LOOPS ARE CENTERED IN THEIR RESPECTIVE LANE, UNLESS OTHERWISE NOTED.

DESIGN VALUES

AVAILABLE CONDUIT AREA: SIZE	*26% FILL (IN^2)
1"	0.23
1 1/4"	0.39
1 1/2"	0.53
2"	0.87
2 1/2"	1.24
3"	1.92
3 1/2"	2.57

CONDUCTOR SIZE TABLE: TYPE	X-SECTION AREA (IN^2)
#14	0.020
#12	0.025
#10	0.031
#8	0.060
#6	0.082

*1978 NATIONAL ELECTRICAL CODES INDICATES 40 % FILL

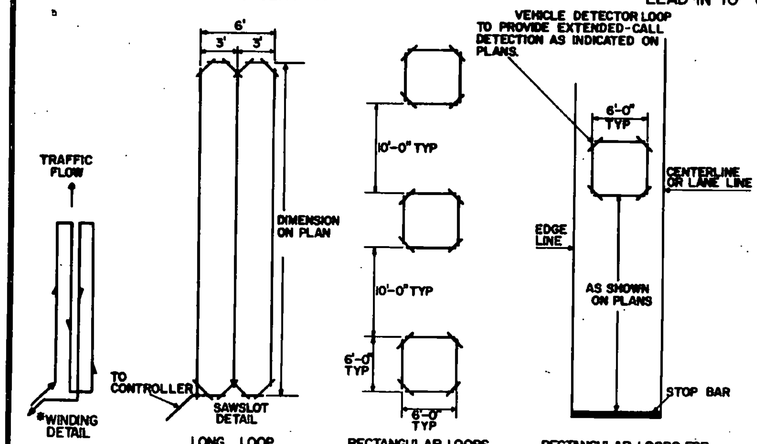

*TWO TURNS REQUIRED UNLESS OTHERWISE NOTED.

TYPICAL LOOP DESIGNS

LONG LOOPS
VEHICLE DETECTOR LOOP INDUCTANCE DESIGN TABLE

LOOP INDUCTANCE (MICROHENRIES)

LARGER LOOP DIMENSION	SHORTER LOOP DIMENSION: 4 FEET 1 TURN	4 FEET 2 TURNS	6 FEET 1 TURN	6 FEET 2 TURNS	8 FEET 1 TURN	8 FEET 2 TURNS
10	29	92	31	98	33	104
15	41	132	43	136	45	144
20	54	172	56	178	58	184
22	59	188	61	194	63	200
24	64	204	66	210	68	216
26	69	220	71	226	73	232
28	74	236	76	242	78	248
30	79	252	81	258	83	264
32	84	268	86	274	88	280
35	91	292	93	298	95	304
40	104	332	106	338	108	344
45	116	372	118	378	120	384
50	129	412	131	418	133	424
55	141	452	143	458	145	464
60	154	492	156	498	158	504
65	166	532	168	538	170	544
70	179	572	181	578	183	584
80	204	—	206	—	208	—
90	229	—	231	—	233	—
100	254	—	256	—	258	—

NOTE: 1. SAME AS #1 FOR RECTANGULAR LOOPS.
2. THE ABOVE INDUCTANCES ARE ESTIMATED QUANTITIES USING THE FOLLOWING EQUATIONS.
1 TURN = (PERIMETER X 0.5) + (LARGER DIMENSION X 1.5)
2 TURN = (PERIMETER X 1.5) + (LARGER DIMENSION X 5.0)
3. SAME AS # 3 FOR RECTANGULAR LOOPS.

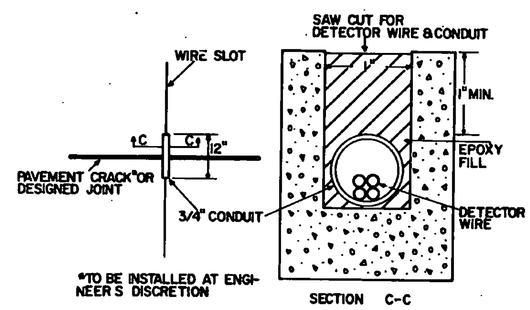

DETECTOR WIRE ACROSS JOINTS OR CRACKS

INSTALLATION NOTES

1.) NO WIRE SPLICING EXCEPT IN PULL BOXES. SPLICES SHALL BE SOLDERED (ROSIN CORE) AND WRAPPED WITH PLASTIC TAPE AND COATED WITH A SEALANT USED FOR SUCH PURPOSES.

2.) BEFORE LAYING IN THE LOOP WIRE, A ONE-QUARTER INCH OF SEALANT SHALL BE PLACED IN THE SAW SLOT AND ALLOWED TO SET UP SUFFICIENTLY TO GIVE THE WIRE SOME SUPPORT. EACH WIRE SHALL BE PLACED IN THE SAW SLOT WITH A BLUNT WOODEN STICK AND SEALED BEFORE PLACING THE NEXT WIRE ON TOP UNTIL THE REQUIRED NUMBER OF TURNS IS COMPLETE.

3.) VEHICLE DETECTOR LOOPS SHALL NOT BE PLACED ON THE BASE COURSE AND PAVED OVER. SAW-CUTS SHALL BE MADE IN THE FINAL PAVEMENT COURSE AND THE LOOPS INSTALLED IN THEM.

4.) LOOP LEAD-INS FROM ADJACENT LOOPS SHALL BE IN SEPARATE SAWSLOTS TO THE CURB PULL BOX.

5.) LOOP FEEDERS SHALL BE AT LEAST ONE FOOT AWAY FROM POWER WIRING.

REVISIONS AND CORRECTIONS

DATE: 10/21/81 LONG LOOP INDUCTANCE TABLE ADDED.
8/23/82 NOTES 4 & 5 ADDED

FEB. 3, 1986 - UPDATED TO 1986 SPECIFICATIONS

APPROVED: JULY 28, 1981
DATE

DIRECTOR OF ENGINEERING AND CONSTRUCTION

CHIEF OF DESIGN

TRANSPORTATION DESIGN ENGINEER

VEHICLE DETECTOR LOOP DETAILS

VERMONT AGENCY OF TRANSPORTATION

STANDARD

E-36

DRUPING 44-131 (8/82)