PRESSURE REDUCING VAULT

Metric

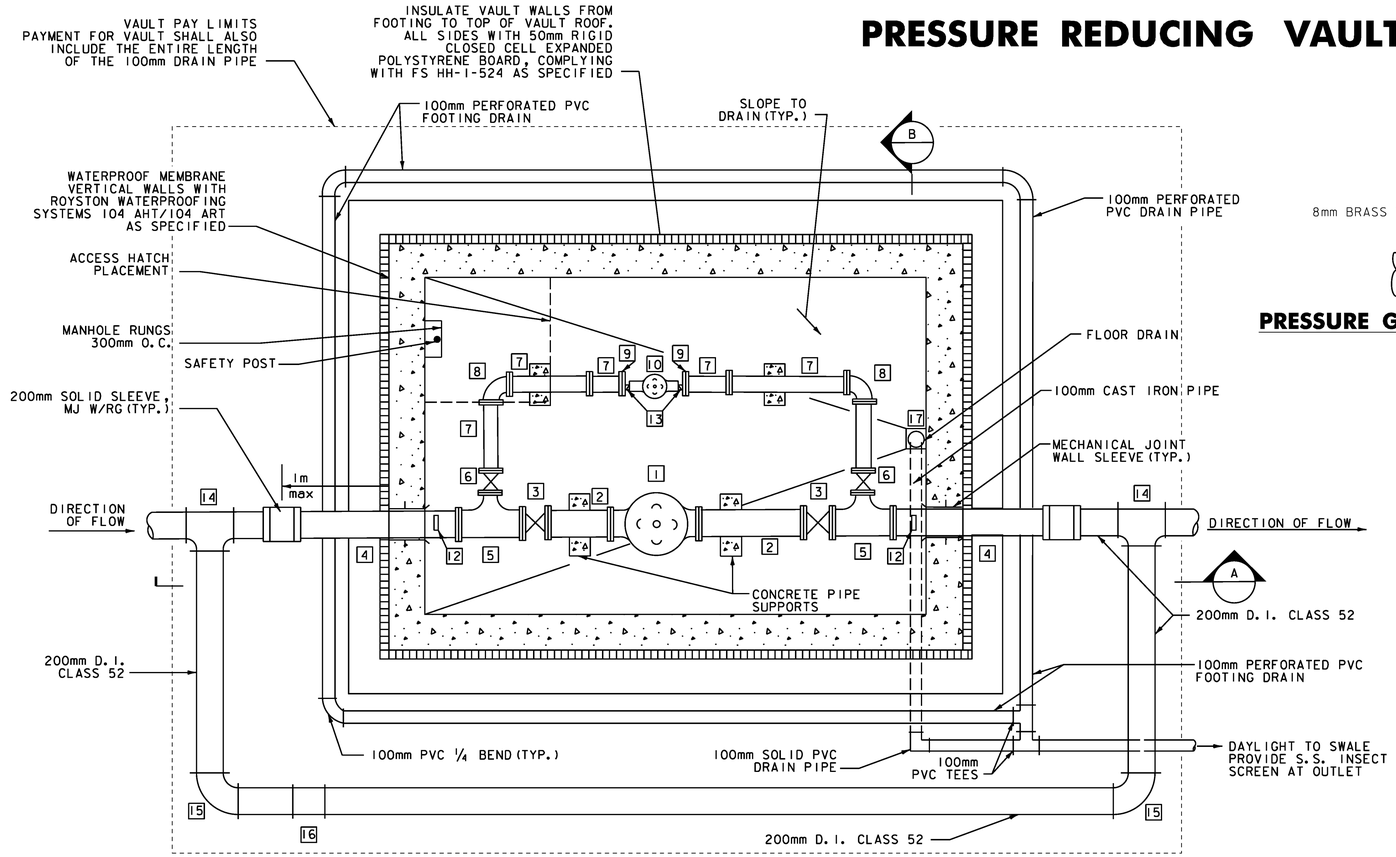

PLAN
NOT TO SCALE

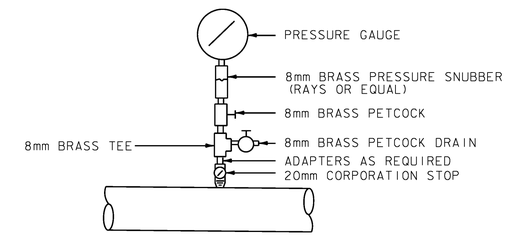

PRESSURE GAUGE AND SNUBBER DETAIL
NOT TO SCALE

LEGEND

1	200mm PRESSURE REDUCING VALVE
2	200mm SPOOL PIECE, FLG
3	200mm GATE VALVE W/ HANDWHEEL, FLG
4	200mm SPOOL PIECE, FLG & PE
5	200mm X 100mm TEE, FLG
6	100mm GATE VALVE W/ HANDWHEEL, FLG
7	100mm SPOOL PIECE, FLG
8	100mm 1/4BEND, FLG
9	100mm + 32mm REDUCING FLANGE
10	32mm PRESSURE REDUCING VALVE
11	100mm SPOOL PIECE, LENGTH AS REQUIRED
12	PRESSURE GAUGE ASSEMBLY 0-200 PSI
13	ADAPTER AS REQUIRED
14	200mm X 200mm TEE, MJ W/RG
15	200mm 1/4BEND, MJ W/RG
16	200mm GATE VALVE, MJ W/RG AND BOX
17	FLOOR DRAIN, TYLER PIPE DRAIN, SERIES 304-TYH OR EQUAL

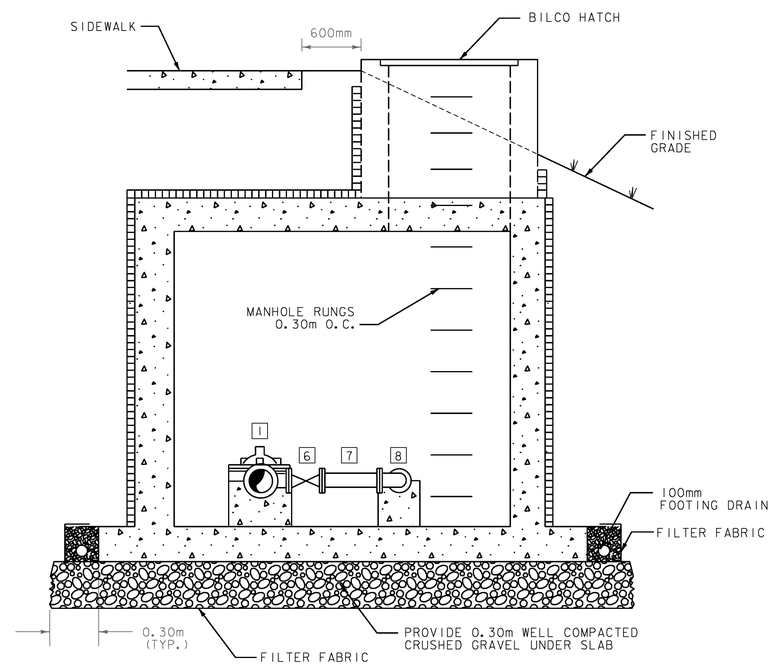

SECTION
NOT TO SCALE (B)

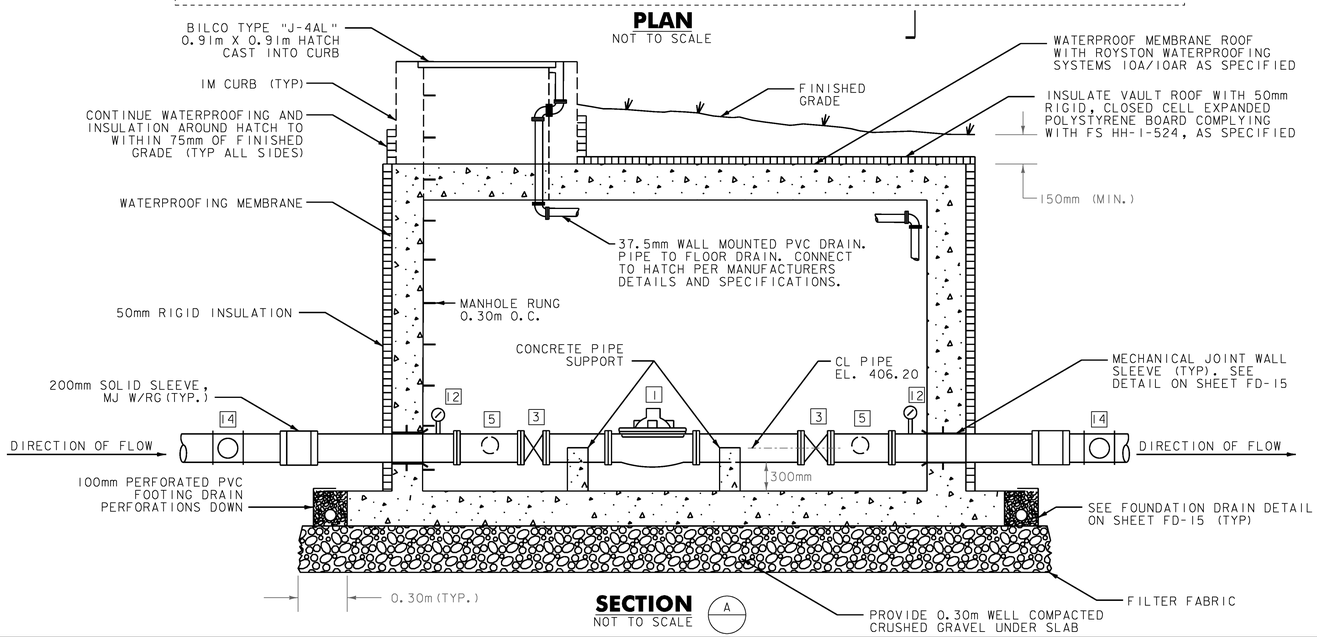

SECTION
NOT TO SCALE (A)

REPLACEMENT SHEETS ISSUED 10/5/11

Stantec

PROJECT NAME: DANVILLE	
PROJECT NUMBER: F EGC 028-3(32)	
FILE NAME: ...\Utilities\PlotFiles\FD-14.ptf	PLOT DATE: 10/4/2011
DESIGN SUPERVISOR: TOM NESBITT	DRAWN BY: STANTEC
DESIGNED BY: STANTEC	CHECKED BY: STANTEC
FIRE DISTRICT WATER PLAN FD-14	SHEET 303 OF 306

10/4/2011 1:27:26 PM V:\953\active\95310033.002\Utilities\PlotFiles\FD-14.ptf