Metric

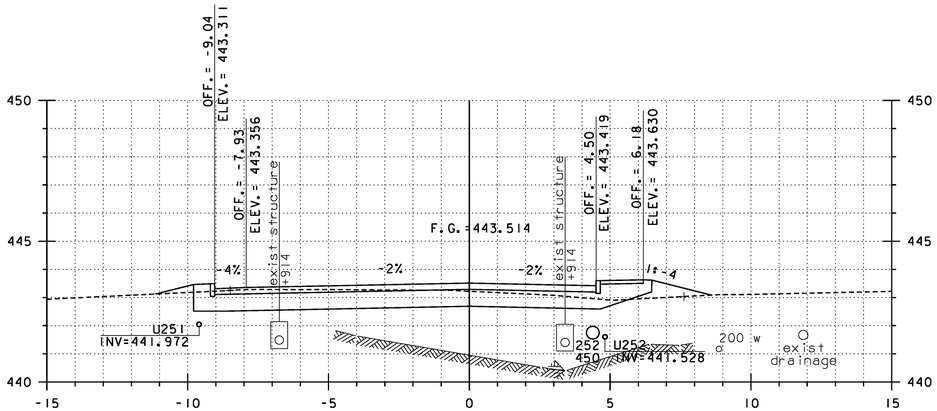

18+900

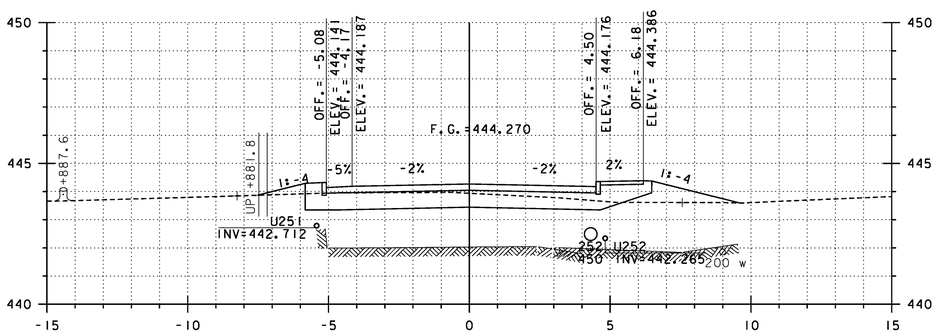

18+890

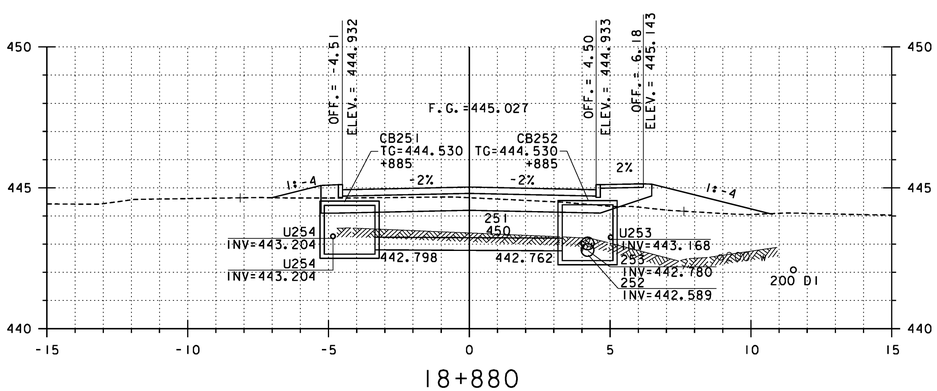

18+880

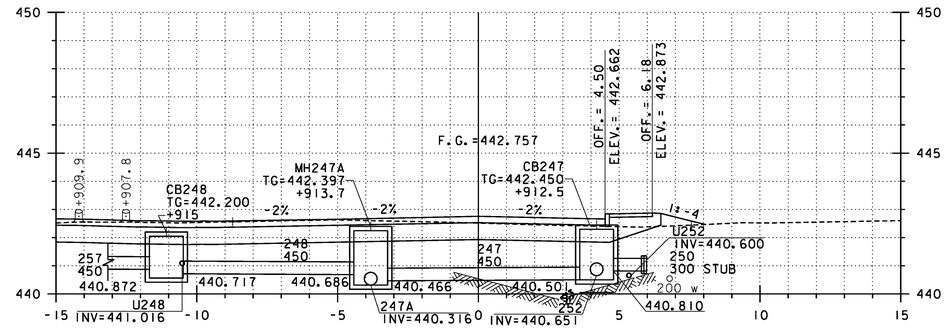

18+910

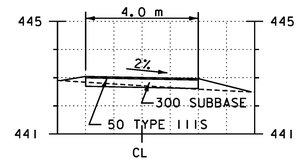

SECTION A-A

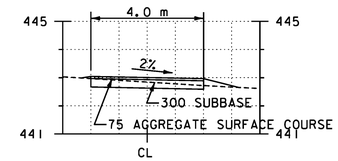

SECTION B-B

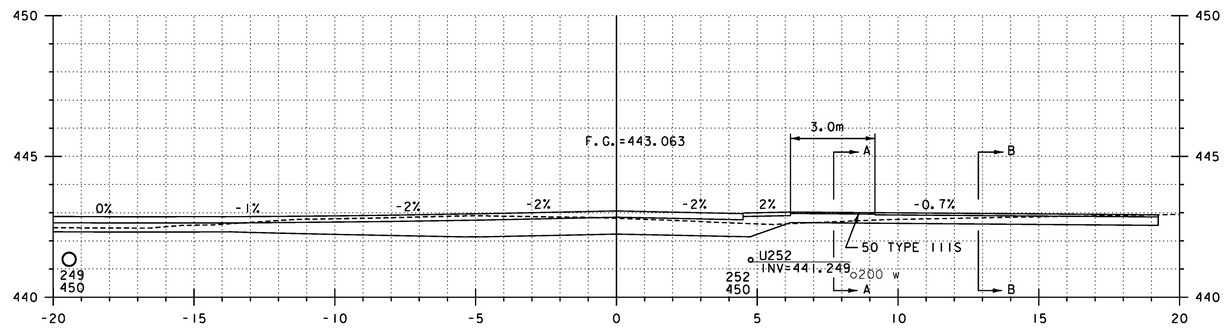

18+906.0
GRAVEL, RT

U.S. ROUTE 2 STA. 18+905.941=
WALDEN HILL ROAD STA. 1+000.000
INTERSECTION LEFT

REPLACEMENT SHEETS ISSUED 02/24/12

STA 18+880 TO 18+910

HORIZONTAL SCALE = 1:100
VERTICAL SCALE = 1:100

Stantec

PROJECT NAME: DANVILLE	
PROJECT NUMBER: F EGC 028-3(32)	
FILE NAME: ...\PlotFiles\133 XS-US2_10m.ptf	PLOT DATE: 2/24/2012
DESIGN SUPERVISOR: GARY SANTY	DRAWN BY: STANTEC
DESIGNED BY: STANTEC	CHECKED BY: STANTEC
US ROUTE 2 CROSS SECTIONS – MLX-10	SHEET 234 OF 306

2/24/2012 2:30:55 PM V:\953\active\953\0033_0092\Highway\Plotfiles\133 XS-US2_10m.ptf