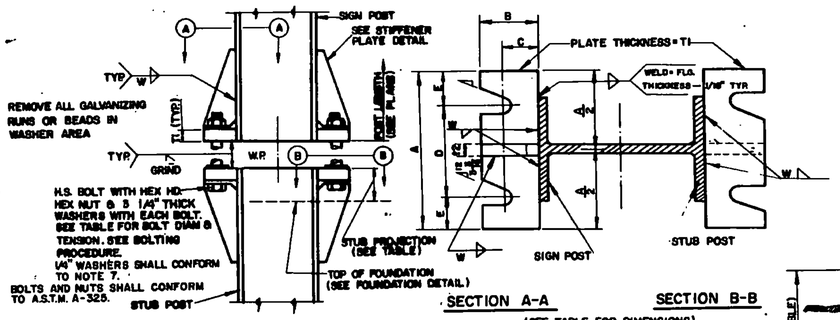

SIGN POST AND STUB POST

ELEVATION

SECTION A-A

SECTION B-B

(SEE TABLE FOR DIMENSIONS)

SECTIONS SHOWN ARE FOR INSTALLATIONS ON RIGHT SHOULDER AND IN GORE. PLATE SLOT BEVELS ARE OPPOSITE HAND FOR INSTALLATIONS ON LEFT SHOULDER OF A ONE WAY HIGHWAY

POST SIZE	BOLT SIZE BOLT FORCE LB	A	B	C	D	E	T1	T2	W	R
W6x9	5/8" Ø x 3 1/2" 2660 *	6"	2"	1 1/4"	2 3/4"	1 1/8"	3/4"	1/2"	1/4"	11/32
W6x12										
W6x15										
W8x18										
W8x21	3/4" Ø x 4 1/2" 3600 **	6"	2 1/4"	1 3/8"	3 1/2"	1 1/4"	1"	3/4"	5/16	13/32
W10x22										
W10x26										
W12x30		7"			4"	1 1/2"				

FUSE PLATE DATA TABLE											
F	G	H	J	K	L	N		DI.	T3	BOLT DIA.
3 5/16"	2"	1 1/16"	4"	2 1/4"	7/8"	1/2"		9/16"	1/4"	1/2
3 5/16	2"	1 1/16	4"	2 1/4"	7/8"	1/2"		9/16"	1/4"	1/2
4 3/16	2 1/2"	1 1/4	6"	3 1/2	1 1/4	5/16		11/16	3/8	5/8
4 3/16"	2 1/2"	1 1/4"	5 1/4"	2 3/4"	1 1/4"	5/16"		11/16"	3/8"	5/8"
4 3/4"	2 1/2"	1 1/2"	5 1/4"	2 3/4"	1 1/4"	3/4"		13/16"	1/2"	3/4"
5 1/4"	3"	1 1/2"	5 3/4"	2 3/4"	1 1/2"	3/4"		13/16"	1/2"	3/4"
5 1/4"	3"	1 1/2"	5 3/4"	2 3/4"	1 1/2"	3/4"		13/16"	1/2"	3/4"
5 1/4"	3"	1 1/2"	6 1/2"	3 1/2"	1 1/2"	3/4"		13/16"	1/2"	3/4"

* 5/8" BOLTS SHALL HAVE AT LEAST A THREAD LENGTH OF 2 INCHES
** 3/8" BOLTS SHALL HAVE AT LEAST A THREAD LENGTH OF 2 1/4 INCHES
THESE BOLTS SHALL BE FURNISHED WITH 2 NUTS F, R EACH BOLT.

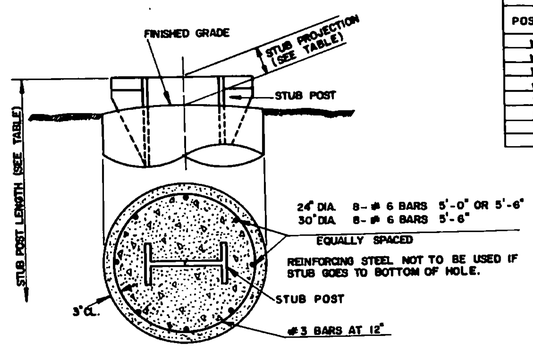

FOUNDATION DETAIL

FOUNDATION DATA					
POST SIZE	BASE DIA.	BASE DEPTH SEE NOTE 11	MIN. STUB LENGTH	STUB PROJ.	VOLUME OF SINGLE BASE
W6x9	24"	5'-0"	2'-0"	3"	0.60 C.Y.
W6x12	24"	5'-0"	2'-0"	3"	0.60 C.Y.
W8x15	24"	5'-0"	2'-6"	3"	0.60 C.Y.
W8x18	24"	5'-6"	2'-6"	3"	0.63 C.Y.
W8x21	24"	5'-6"	3'-0"	2 1/2"	0.63 C.Y.
W10x22	24"	5'-6"	3'-0"	2 1/2"	0.63 C.Y.
W10x26	24"	6'-0"	3'-0"	2 1/2"	0.70 C.Y.
W12x30	30"	6'-0"	3'-0"	2 1/2"	1.1 C.Y.

FOUNDATION FOR W-SHAPED POSTS

PROCEDURE FOR ASSEMBLY OF BASE CONNECTION

1. Make sure all bolts are from the same stock.
2. Try nuts on bolt threads, making sure they turn easily.
3. Place (3) bolts in Skidmore - Wilhelm device. Torque to proper tension in device. Calibrate torque wrench by checking torque on these three bolts when under proper tension in device.
4. The testing and calibration shall be done at the Vermont Highway Department's Material Laboratory or at such place designated by them.
5. Use the average of the three torques on similar bolts in the real support.
6. Assemble posts to stub with bolts and with three 1/4" flat washers, one each, under head of bolt, between plates, and under nut.
7. Shim as required to plumb post.
8. Tighten all bolts the maximum possible with a 12" to 15" wrench to bed washers and shims and to clean bolt threads. Then loosen each bolt in turn and retighten in a systematic order to the prescribed tension.
9. Then base plate bolts will be torqued to prescribed bolt tension on the plans. After the initial torquing use a second nut to insure that the first nut will not back off. The contractor, with the Department inspector will return to the sign two more times at intervals of 30 days ± for the purpose of checking and reestablishing the prescribed torque. The second nut shall remain as a lock nut.

FABRICATION NOTE

(Important)

All friction fuse bolts shall be tightened by the fabricator to the prescribed bolt tension mentioned below. The contractor will be held responsible to check and certify that the below residual tensions are obtained.

BOLT SIZE	MIN. RESIDUAL BOLT TENSION
1/2" Ø	12050 LBS
5/8" Ø	19200 LBS
3/4" Ø	28400 LBS
7/8" Ø	36050 LBS

GENERAL NOTES

1. DESIGN CONFORMS WITH AASHTO. SPECIFICATIONS FOR DESIGN AND CONSTRUCTION OF STRUCTURAL SUPPORTS FOR HIGHWAY SIGN.
2. MATERIAL AND FABRICATION SHALL CONFORM TO THE REQUIREMENTS OF STATE OF VERMONT AGENCY OF TRANSPORTATION STANDARD SHEETS AND SPECIFICATIONS.
3. ALL STRUCTURAL STEEL SHALL CONFORM TO A.S.T.M. A 36
4. ALL STRUCTURAL STEEL, BOLTS, NUTS AND WASHERS SHALL BE GALVANIZED AS PER A.S.T.M. A-153 EXCEPT AS NOTED.
5. ALL HIGH STRENGTH BOLTS, NUTS AND WASHERS SHALL BE GALVANIZED AS PER A.S.T.M. A-123 HOLES SHALL BE DRILLED. THE POST CUT SHALL BE A SAW CUT ONLY. ALL OTHER CUTS EXCLUDING POST CUTS MAY BE FLAME CUT PROVIDED ALL EDGES ARE GROUND. METAL PROJECTING BEYOND THE PLATE FACE WILL NOT BE PERMITTED.
6. ALL HIGH STRENGTH BOLTS AND NUTS SHALL CONFORM TO A.S.T.M. A-325.
7. ALL 1/4" FLAT WASHERS SHALL CONFORM TO THE HARDNESS REQUIREMENTS FOR A.S.T.M. A-325 WASHERS.
8. PAINT FOR SAW CUT SHALL BE A SINGLE COMPONENT ZINC-RICH COMPOUND YIELDING A DRIED FILM OF AT LEAST 85% PURE ZINC. IT SHALL MEET OR EXCEED THE REQUIREMENT OF MIL-P-21035.
9. ALL SIGNS MOUNTED ON STEEL POSTS SHALL BE ERECTED A MINIMUM OF 7' ABOVE EDGE OF PAVEMENT TO BOTTOM OF SIGN AND THE INSIDE EDGE OF THE SIGN POSITIONED A MINIMUM OF 30' FROM EDGE OF PAVEMENT UNLESS OTHERWISE INDICATED ON THE PLANS.
10. EXTREME CARE SHOULD BE TAKEN TO KEEP THE SLIP JOINT FREE OF ANY FOREIGN MATERIAL, EITHER BY WRAPPING THE JOINT OR THOROUGH CLEANING IMMEDIATELY AFTER POURING OF CONCRETE.
11. IF BASE DEPTH CANNOT BE OBTAINED OR WET AND/OR UNUSUAL SOIL CONDITIONS ARE ENCOUNTERED, THE RESIDENT SHOULD CONTACT THE TRAFFIC DESIGN SECTION, AGENCY OF TRANSPORTATION.

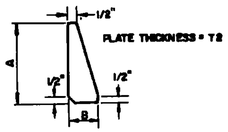

STIFFENER PLATE

(SEE TABLE FOR DIMENSIONS)

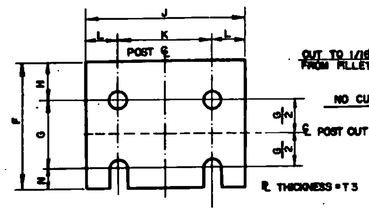

HOLE DIAMETER = DI.

USE H.S. BOLTS WITH HEX. HD. AND HEX. NUTS, ONE 1/4" THICK FLAT WASHER UNDER EA. BOLT HEAD, AND ONE 1/4" THICK FLAT WASHER UNDER NUT. 1/4" WASHERS SHALL CONFORM TO NOTE 7.

FUSE PLATE

(SEE TABLE FOR DIMENSIONS AND WEIGHT)

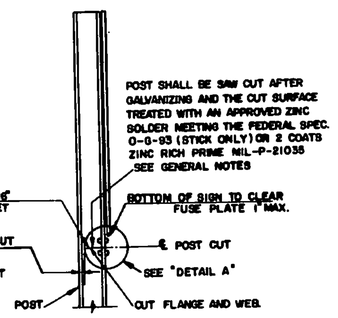

FRICTION FUSE PLATE

W-SHAPED POSTS

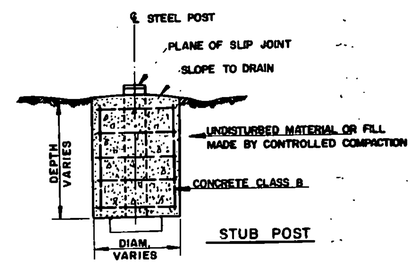

STUB POST

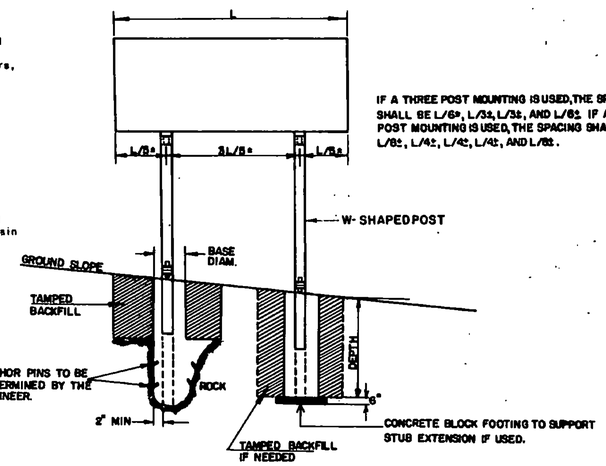

IF A THREE POST MOUNTING IS USED, THE SPACING SHALL BE L/6±, L/3±, L/3±, AND L/6±. IF A FOUR POST MOUNTING IS USED, THE SPACING SHALL BE L/8±, L/4±, L/4±, L/4±, AND L/8±.

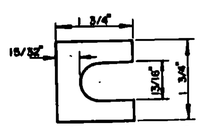

FURNISH 2 - .012"± THICK AND 2 - .032"± THICK SHIMS PER POST. SHIMS SHALL BE FABRICATED FROM BRASS SHIM STOCK OR STRIP CONFORMING TO A.S.T.M. B 36

SHIM DETAIL

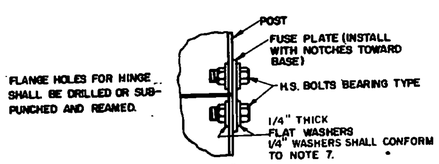

"DETAIL A" HINGE

(SEE FABRICATOR NOTE)

NOTE: CUT SURFACES WILL NOT BE TREATED UNTIL PLATE IS INSTALLED AND ALL BOLTS FULLY TIGHTENED.

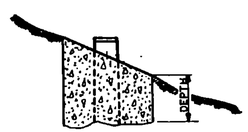

FOUNDATION DETAILS

CONSTRUCTION METHOD.

HOLES FOR POST FOOTINGS MAY BE AUGERED OR DUG. IF THE MATERIAL IS FIRM, OR ALL DISTURBED SOIL AROUND THE CIRCUMFERENCE OF THE AUGERED HOLE IS REMOVED, THE HOLES MAY BE LEFT WITH EARTH SIDES. IF NOT, A SUITABLE FORM APPROVED BY THE ENGINEER SHALL BE USED. CORRUGATED METAL CULVERT PIPE OR PAPER FORMS MANUFACTURED FOR USE AS CONCRETE COLUMN FORMS WILL BE ACCEPTABLE. IF THE STUB IS EXTENDED TO THE BOTTOM OF THE HOLE, A CONCRETE BLOCK FOOTING SHALL BE UTILIZED TO SUPPORT THE POST AND THE POST SHALL BE HELD SECURELY IN PLACE AT THE BOTTOM. THIS MAY BE DONE BY EMBEDDING THE POST AND CONCRETE BLOCK FOOTING IN WET CONCRETE AND ALLOWING TO SET WITH THE POST SECURED IN POSITION, PLUMBED AND PROPERLY BRACED, THE REMAINING FOOTING MAY BE POURED. THE TIME BETWEEN POURS FOR THE CURING OF THE CONCRETE SHALL BE AS DETERMINED BY THE ENGINEER. THE FORM SHALL BE LEFT IN PLACE AND THE HOLE PROPERLY BACKFILLED. NO PART OF THE FORM SHALL SHOW ABOVE THE GROUND LINE WHEN THE WORK IS COMPLETED.

REVISIONS AND CORRECTIONS

DEC. 12, 1975	REVISED TO CONFORM WITH SPECIFICATION.
DEC. 15, 1976	REVISED TO CHANGE FOOTING SIZES, AND 1/4" WASHERS.
MAY 29, 1979	MISCELLANEOUS REVISIONS TO TABLES, NOTES AND DETAILS, INCLUDING NEW POST SIZE DESIGNATIONS.
FEB. 3, 1986	UPDATED TO 1986 SPECIFICATIONS

APPROVED DATE Dec. 21, 1971

R H Arnold
CHIEF ENGINEER

E H Stickney
ASST. CHIEF ENGINEER

G. M. Lane
HIGHWAY ENGINEER

W- SHAPED STEEL SIGN SUPPORTS & FOUNDATIONS

VERMONT AGENCY OF TRANSPORTATION

STANDARD

E-24