Metric

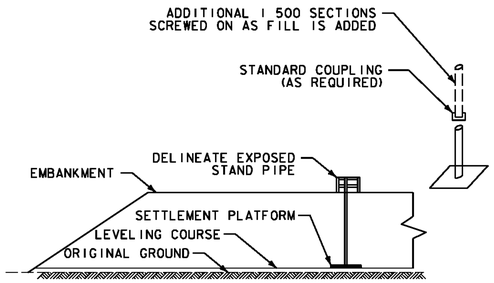

TYPICAL SECTION

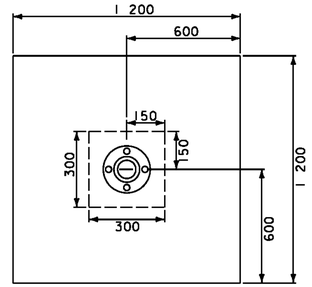

PLAN VIEW

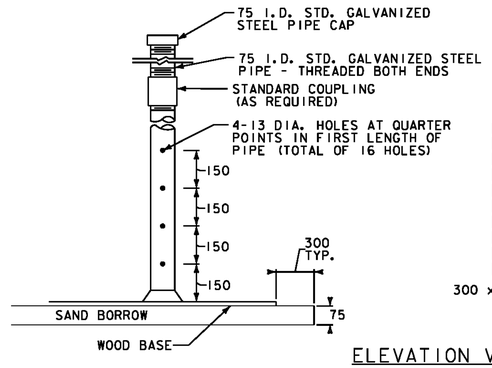

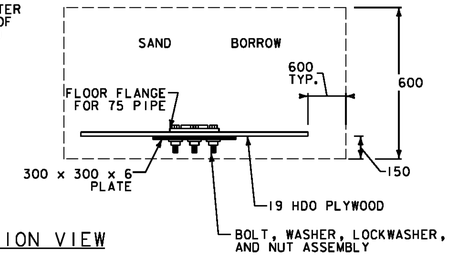

ELEVATION VIEW

TYPICAL DETAIL OF SETTLEMENT PLATFORM TYPE I

NOT TO SCALE

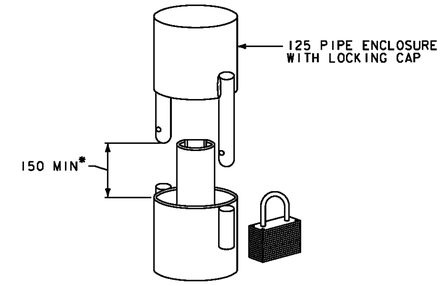

* DIMENSION TO BE DETERMINED FROM INCLINOMETER PULLEY ASSEMBLY

LOCKING PROTECTIVE STEEL CAP DETAIL

NOT TO SCALE

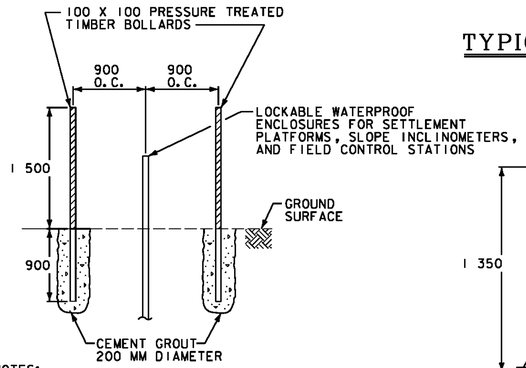

NOTES:

1. PAINT TIMBER BOLLARDS FLUORESCENT ORANGE.
2. COST OF ALL MATERIALS, LABOR AND INCIDENTALS ASSOCIATED WITH THE INSTALLATION OF THE BOLLARDS TO BE INCLUDED IN UNIT PRICE BID FOR ITEM 900.640 SPECIAL PROVISION (INCLINOMETER).

TIMBER BOLLARD DETAIL

NOT TO SCALE

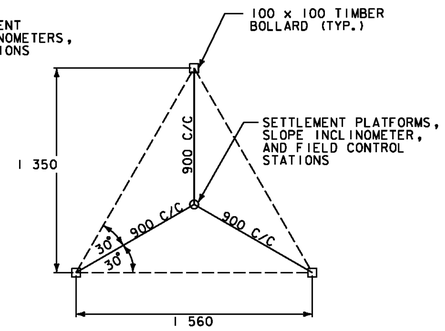

TIMBER BOLLARD PLAN

NOT TO SCALE

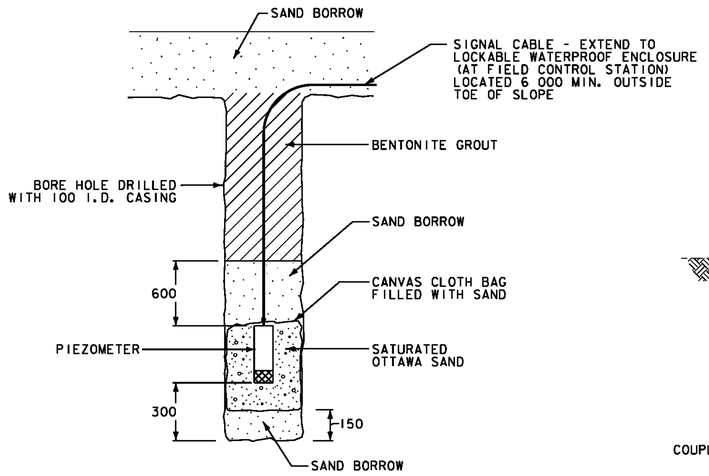

VIBRATING WIRE PIEZOMETER DETAIL

NOT TO SCALE

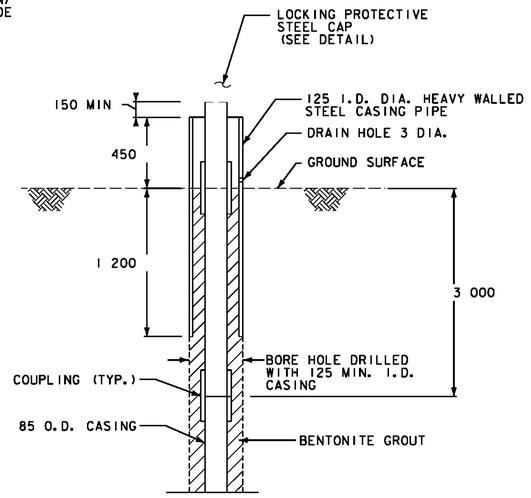

NOTE:

TOP 900 OF CASING TO BE PAINTED ORANGE WITH INCLINOMETER OR OBSERVATION WELL NUMBER PAINTED BLACK.

SLOPE INCLINOMETER DETAIL

NOT TO SCALE

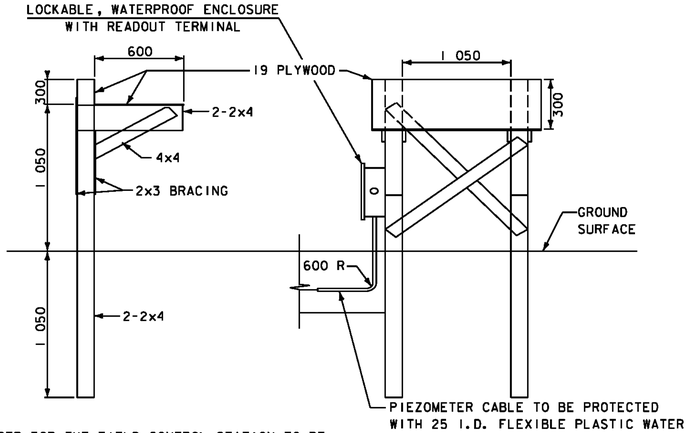

NOTES:

1. LUMBER FOR THE FIELD CONTROL STATION TO BE INCIDENTAL TO UNIT PRICE BID FOR ITEM 900.620 SPECIAL PROVISION (PIEZOMETER, VIBRATING WIRE).
2. ALL PIEZOMETER CABLE SHALL BE CLEARLY MARKED WITH THE DESIGNATED NUMBERS.

FIELD CONTROL STATION

NOT TO SCALE

GENERAL NOTES:

TYPE I PLATFORM

1. SETTLEMENT PLATFORM BASE MATERIAL SHALL BE 100x100x19 HDO PLYWOOD CONFORMING TO SUBSECTION 750.06, TREATED FOR SOIL CONTACT RETENTION IN ACCORDANCE WITH AWPA C9.
2. THE SETTLEMENT PLATFORM BASE SHALL BE SET ON A MINIMUM OF 150 OF SAND BORROW GRADED AND COMPACTED TO A SMOOTH LEVEL SURFACE. SAND BORROW SHALL CONFORM TO THE GRADATION REQUIREMENTS OF TABLE 703.03A. WHEN DIRECTED BY THE ENGINEER ADDITIONAL SAND BORROW SHALL BE USED AS A LEVELING COURSE. PAYMENT FOR THE SAND BORROW SHALL BE CONSIDERED INCIDENTAL TO SPECIAL PROVISION (SETTLEMENT PLATFORM, TYPE I).
3. LUMBER SHALL CONFORM TO SUBSECTION 709.01 AND BE TREATED WITH TYPE IV PRESERVATIVE IN ACCORDANCE WITH SUBSECTION 726.01 (MINIMUM RETENTION OF 9.61 KG/CM).
4. HARDWARE AND NAILS SHALL BE GALVANIZED IN ACCORDANCE WITH AASHTO M111M/M111.
5. DURING THE CONTRACT PERIOD THE CONTRACTOR IS RESPONSIBLE FOR PROTECTING AGAINST DAMAGE ANY EXPOSED PORTIONS OF A SETTLEMENT PLATFORM OR A PIEZOMETER.
6. THE EXPOSED PORTION OF ANY TYPE I SETTLEMENT PLATFORM SHALL BE DELINEATED WITH THREE TIMBER BOLLARDS AS DETAILED ON THIS SHEET.
7. THE STAND PIPE, COUPLINGS, CAPS AND FLANGE BASE SHALL BE FOR A 75 I.D. STEEL PIPE CONFORMING TO THE REQUIREMENTS OF SUBSECTION 740.05.
8. THE 300x300x6 STEEL PLATE SHALL BE GALVANIZED AND CONFORM TO SUBSECTION 714.03.
9. ALL BOLTS, NUTS, AND WASHERS SHALL BE GALVANIZED AND CONFORM TO SUBSECTION 714.04.

INSTRUMENTATION READOUT NOTES

1. ONE (1) READOUT INSTRUMENT FOR PIEZOMETER (VIBRATING WIRE) WITH ALL NECESSARY ACCESSORIES SHALL BE PROVIDED.
2. ONE (1) INCLINOMETER READOUT INSTRUMENT WITH ALL NECESSARY ACCESSORIES (CABLE, PULLEY SYSTEM, TWO PROBES, ETC.) SHALL BE PROVIDED (SEE SPECIAL PROVISIONS).

GEOTECHNICAL INSTRUMENTATION DETAIL SHEET

DATUM	
VERTICAL	NAVD 88
HORIZONTAL	NAD 83(92)

PROJECT: CORNWALL	PROJECT NO.: BRS 0172(6)
DESIGN FILE NAME: z85e042geodet.dgn	
IPARM FILE NAME:	PLOT DATE: 2/15/2010
SURVEYED BY: VTRANS & VT SURVEY	SURVEY DATE: 1996&1999
SQUAD LEADER: MARTHA EVANS-MONGEON	DRAWN BY: ERIK ATKINS
	SHEET: 85 OF 144