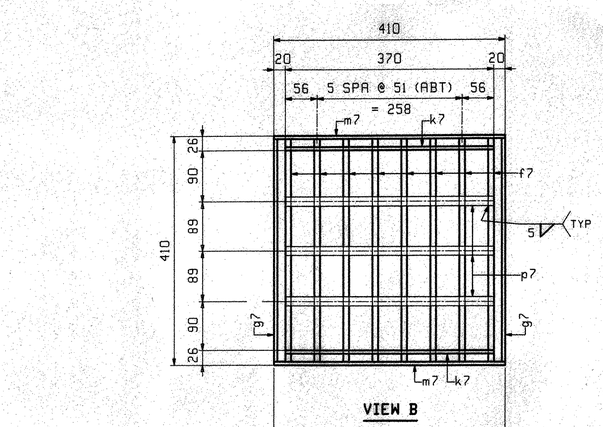

VIEW B

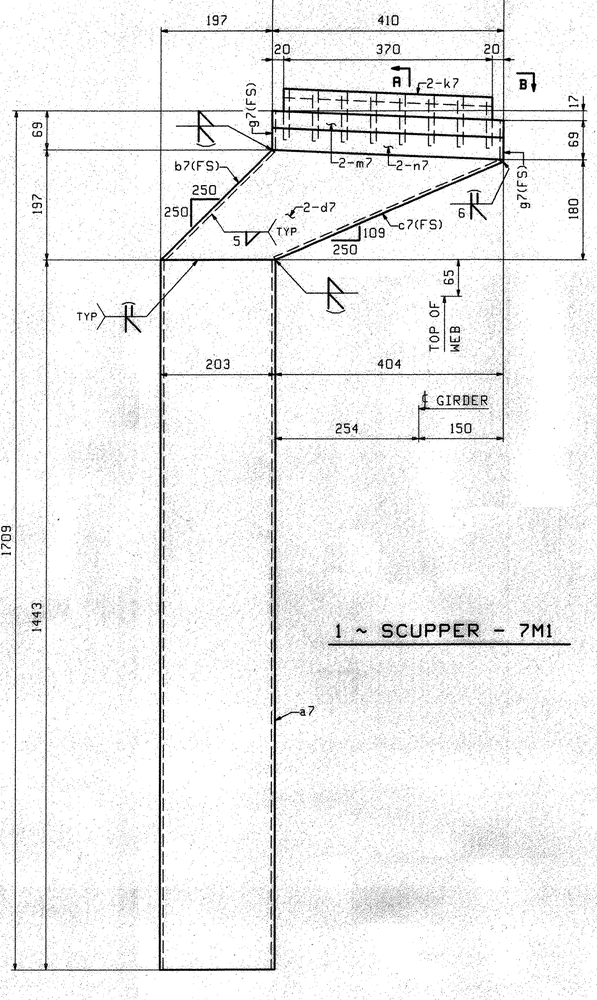

1 ~ SCUPPER - 7M1

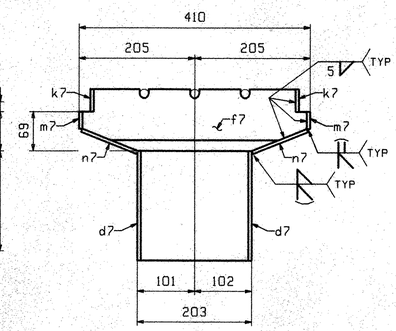

SECTION A

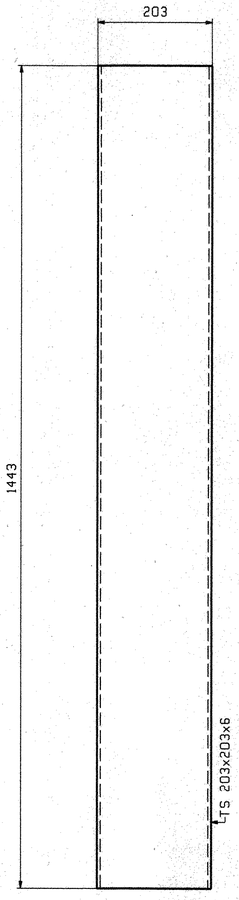

DETAIL - a7
1 REQ'D

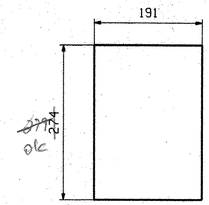

DETAIL - b7
1 REQ'D

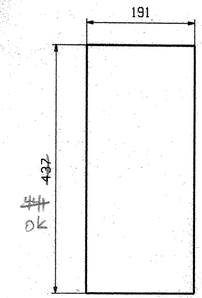

DETAIL - c7
1 REQ'D

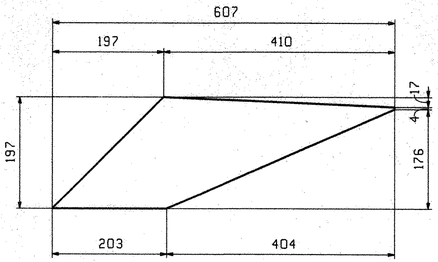

DETAIL - d7
2 REQ'D

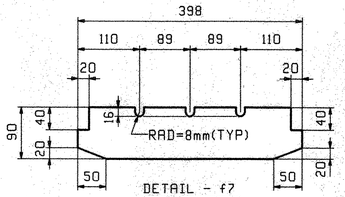

DETAIL - f7
8 REQ'D

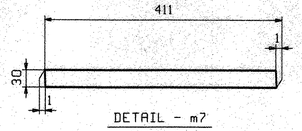

DETAIL - m7
2 REQ'D

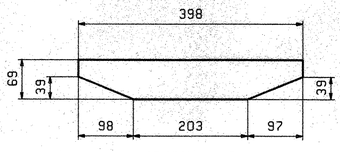

DETAIL - g7
2 REQ'D

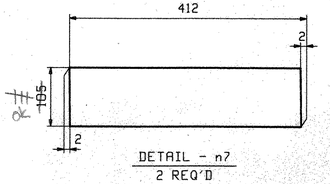

DETAIL - n7
2 REQ'D

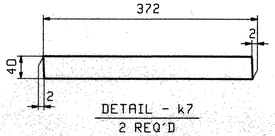

DETAIL - k7
2 REQ'D

ABM INFO		SHIP	BILL OF MATERIAL					JOB NO. 293	DRAWING NO. 7	REV.
PAGE	LINE	MARK	QTY	MARK	MATERIAL	LENGTH m	LENGTH mm	REMARKS	WT	PROCUREMENT NOTES
		7M1	1		SCUPPER				107 kg 235 lbs	
3	D		1	a7	TS203x203x6	1	443	(A500M-B) (GALV)		
3	E		1	b7	PL 6x191	0	274	(M270M-250) (GALV)		
3	E		1	c7	PL 6x191	0	437	(M270M-250) (GALV)		
3	F		2	d7	PL 6x197	0	607	(M270M-250) (GALV)		
3	L		8	f7	BR 10x90	0	398	(M270M-250) (GALV)		
3	G		2	g7	PL 6x69	0	398	(M270M-250) (GALV)		
3	H		2	k7	PL 6x40	0	372	(M270M-250) (GALV)		
3	J		2	m7	PL 6x30	0	411	(M270M-250) (GALV)		
3	K		2	n7	PL 6x105	0	412	(M270M-250) (GALV)		
3	M		3	p7	ROD 16 ø	0	375	(M270M-250) (GALV)		

NOTES:
1. DRAIN PIPES AND CONNECTION ANGLES/PL'S SHALL BE BLAST CLEANED PER SSPC-SP6/NACE 3 AND GALVANIZED IN ACCORDANCE WITH AASHTO M-111.
2. FOR GENERAL NOTES SEE DRAWING GN1.

OUT FOR APPROVAL	3-7-06									
OUT FOR APPROVAL										
ISSUED TO SHOP										
FIELD & OFFICE										
REV.	REMARKS	DATE	DWN	CHK	APP	Q.A.	NO.	DIA.	LGT	TYPE	WASHER

MATERIAL: M270-250(GALV)
ELECTRODES:
HOLES: NONE
SHOP BOLTS: NONE

SURFACE PREP. & PAINT:
SEE NOTES ABOVE & DRAWING GN1

DESCRIPTION: SCUPPER
JOB: VT 114 OVER THE EAST BRANCH OF THE PASSUMPSIC RIVER
BRIDGE NO. 8
LYNDON, VT. COUNTY OF CALEDONIA
TENSOR 2625

	DRAWN BY	DATE
	JTB	02/16
	CHKD BY	
	PCP	03/02
	APPROV BY	
	SUPERVISOR	W. J. GATTI
PROJ NO. BRS 0269 (8)S	Q.A.	
CUSTOMER: WINTERSET, INC.		

CASCO BAY STEEL STRUCTURES, INC.
75 SPRING HILL ROAD SACO, MAINE 04072
PHONE (207) 282-7360 FAX. (207) 282-1179

JOB NO.	DRG. NO.
293	7
	REV. △

RECEIVED
CK'D BY JMR OK'D BY CWC
MAR 13 2006
RESUBMIT ____ APPROVED ✓
BY CWC DATE 4-11-06

PCP Fri Mar 3 09:50:26 EST 2006 /users/jobs/2625/7 : Rev0

021-55