Metric

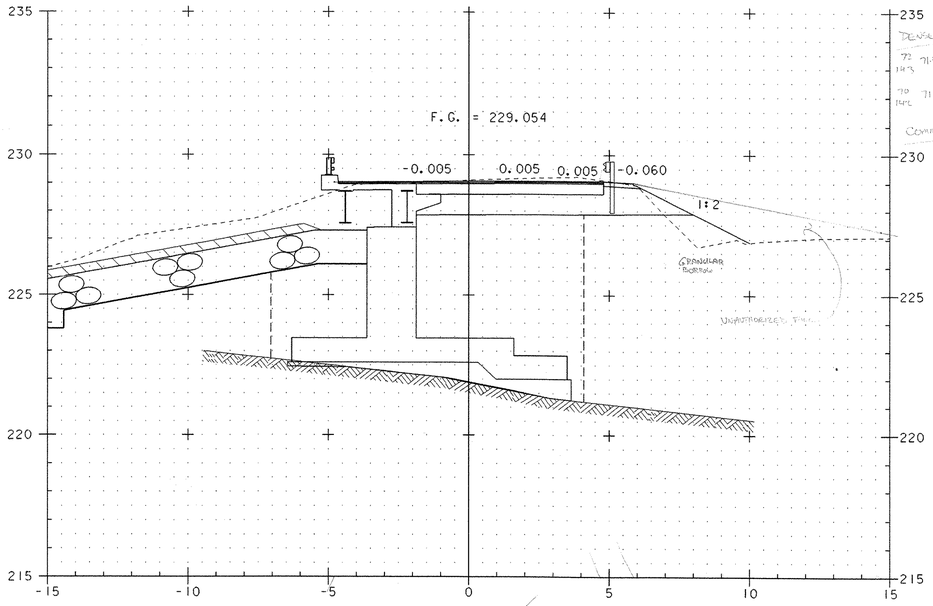

STA. 3+579.319
END BRIDGE

3+580

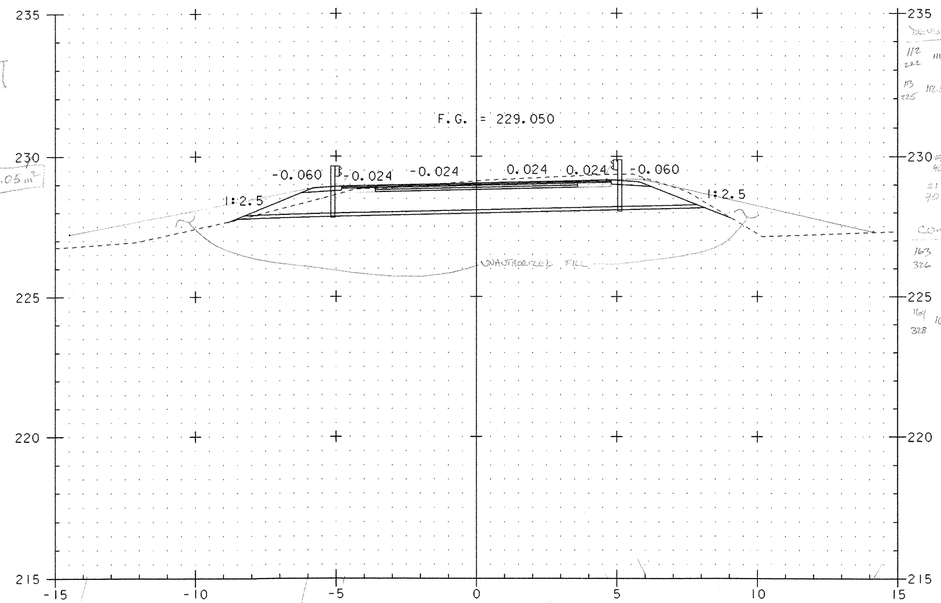

3+590

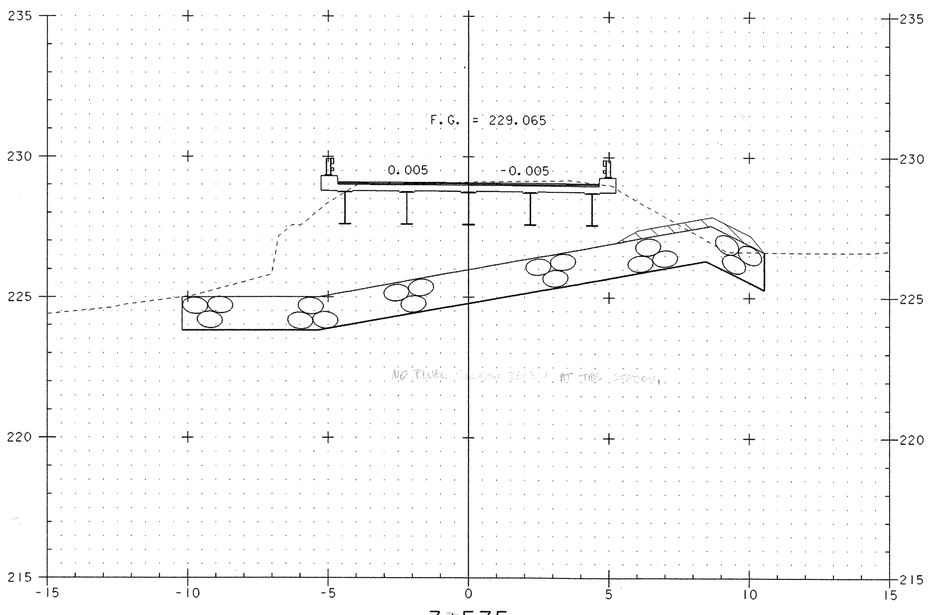

3+575

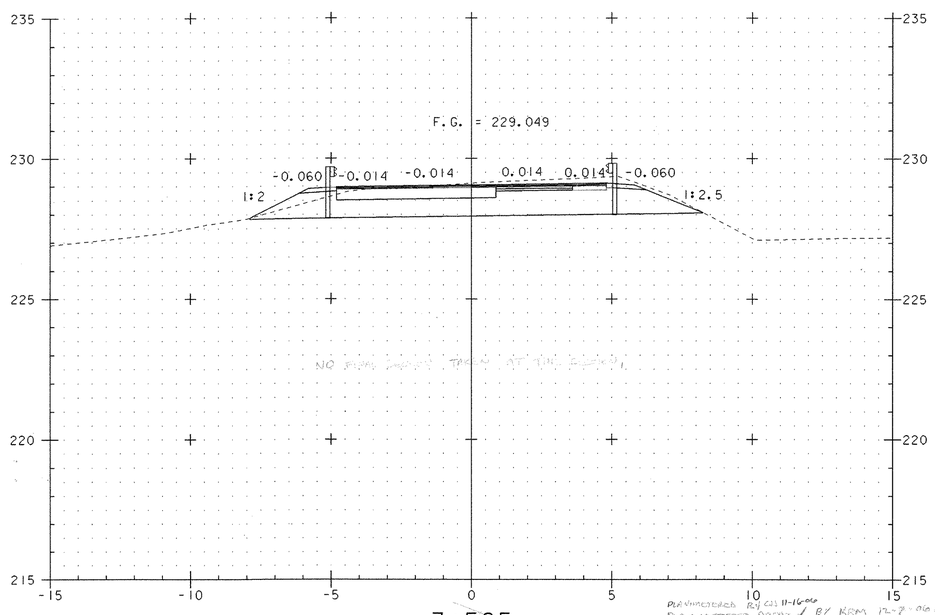

3+585

MAINLINE CROSS SECTIONS (8)

0 1 2 4 6 8 10

SCALE = 1:100

PROJECT NAME: LYNDON	
PROJECT NUMBER: BRS 0269 (8)S	
FILE NAME: 85e041\Structures\se041m08.I	PLOT DATE: 29-NOV-2005
PROJECT MANAGER: R. R. WHITCOMB	DRAWN BY: G. ROY
DESIGNED BY: G. ROY	CHECKED BY: M. LOZIER
STA. 3+575 TO STA. 3+590	SHEET 58 OF 68