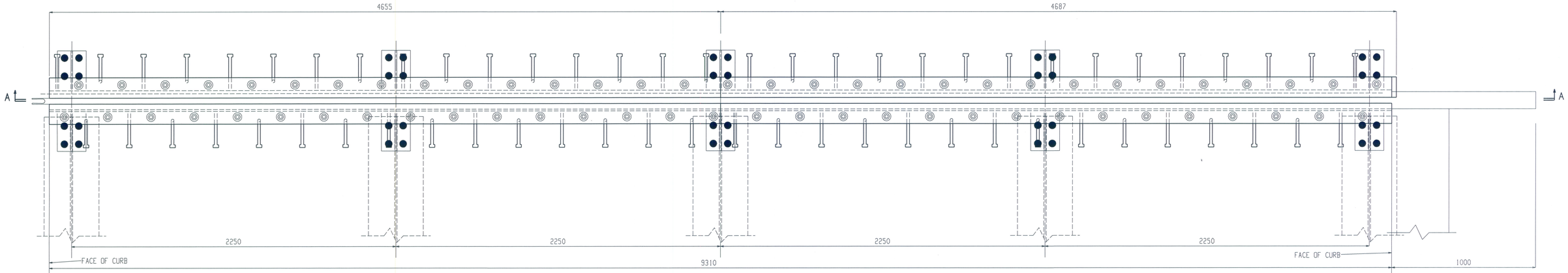

FJ1-ONE REQ'D @ ABUTMENT 1

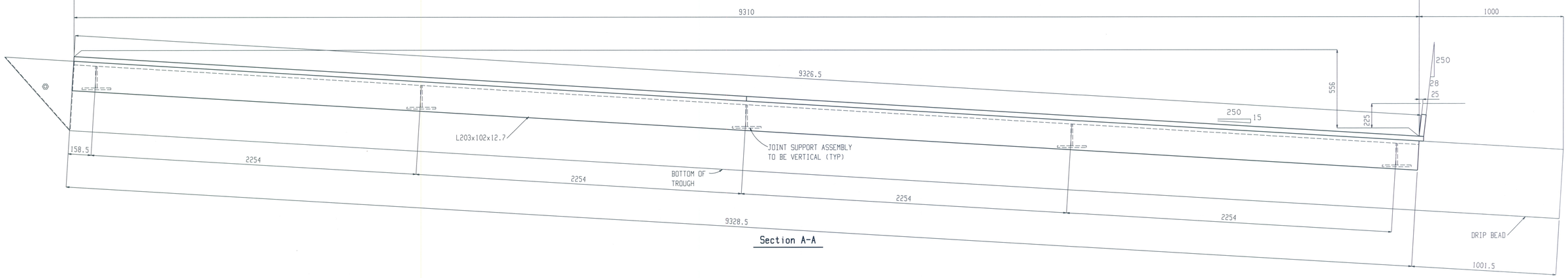

Section A-A

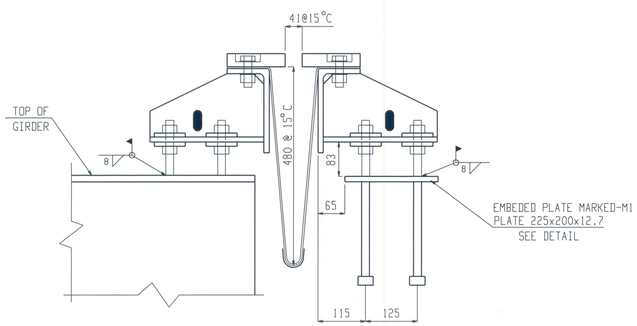

TYPICAL SECTION AT GIRDERS

RECEIVED
CK'D BY LSS CK'D BY RSY
MAR 08 2011
RESUBMIT ____ APPROVED ✓
BY CPW DATE 3/23/11

Structures Copy

REV.	REMARKS	DATE	DWN	CHK	APP	Q.A.	NO.	DIA.	LGT	TYPE	WASHER
	OUT FOR APPROVAL	01-05	PD	PD							
	OUT FOR APPROVAL	02-28	PD	PD							
	ISSUED TO SHOP										
	FIELD & OFFICE										

PROJECT NO. STATE PROJECT NO. BRF 022-1(20)

MATERIAL : ASTM A709-GR50W | ELECTRODES : SEE PROC | HOLES : AS NOTED | SHOP BOLTS : ϕ

SURFACE PREPN & PAINT :

DESCRIPTION : EXPANSION JOINT -ABUTMENT 1

JOB : VT RTE 107 OVER STONEY BROOK
BRIDGE 9
STOCKBRIDGE, VT
COUNTY OF WINDSOR

CUSTOMER : AUSTIN CONSTRUCTION

DRAWN BY	DATE
LCL	JAN 2011
CHECKED BY	DATE
PD	JAN 2011
APPROVED BY	DATE
Q. A.	DATE
JOB NO.	DRG. NO.
461	JE1
Fab: Job:	REV.

CASCO BAY STEEL STRUCTURES, INC.
75 SPRING HILL ROAD SACO, MAINE 04072
PHONE (207) 282-7360 FAX. (207) 282-1179

JOB NO.	DRG NO.
461	E1