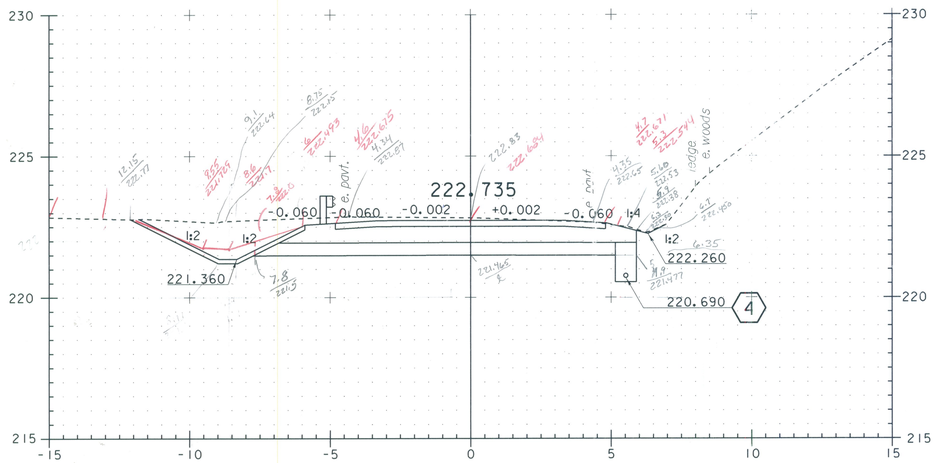

10+040

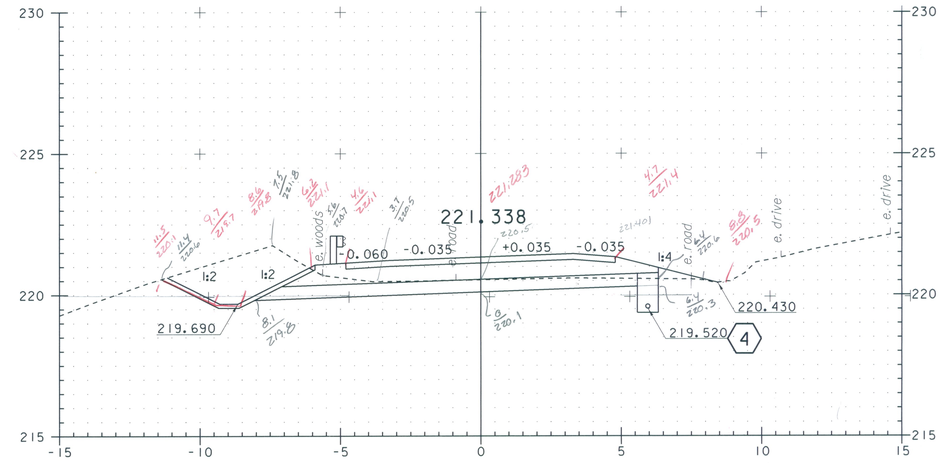

10 + 084.4 LT
END GRASS LINED CHANNEL

10+080

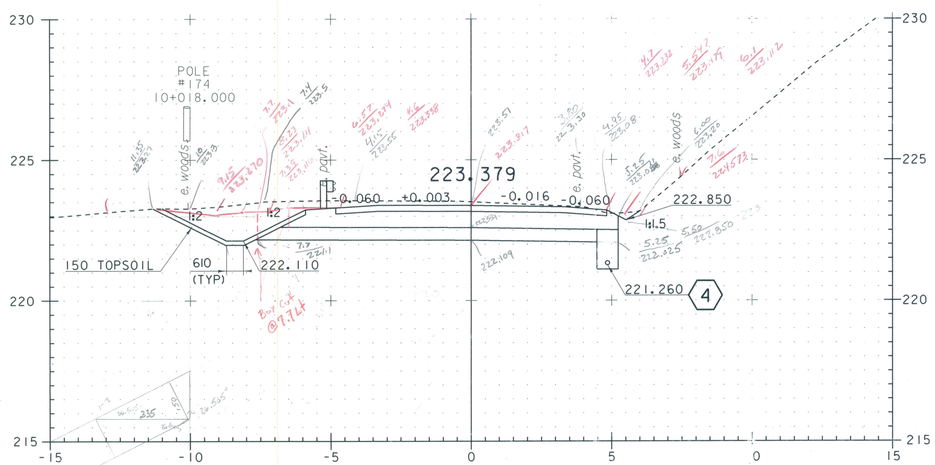

10 + 015.0 LT
BEGIN GRASS LINED CHANNEL

10+020

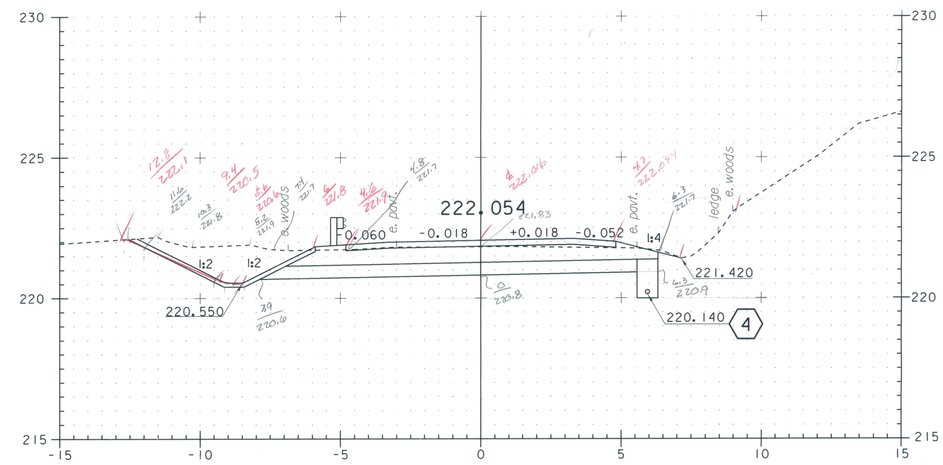

10+060

10+020.000
End Approach
Begin Project

SEE SHEET 12 FOR DRAINAGE FLAG DESCRIPTIONS

0 5 10
GRAPHIC SCALE 1:100

STA 10+020 TO 10+080

PROJECT NAME: STOCKBRIDGE	
PROJECT NUMBER: BRF 022-1(20)	
FILE NAME: /sr+5/85e039/de039xsl.dgn	PLOT DATE: 08-APR-2010
PROJECT LEADER: C.P. Williams	DRAWN BY: G. Shangraw
DESIGNED BY: G. Shangraw	CHECKED BY: R.S. Young
MAINLINE CROSS SECTIONS 2	SHEET 118 OF 139