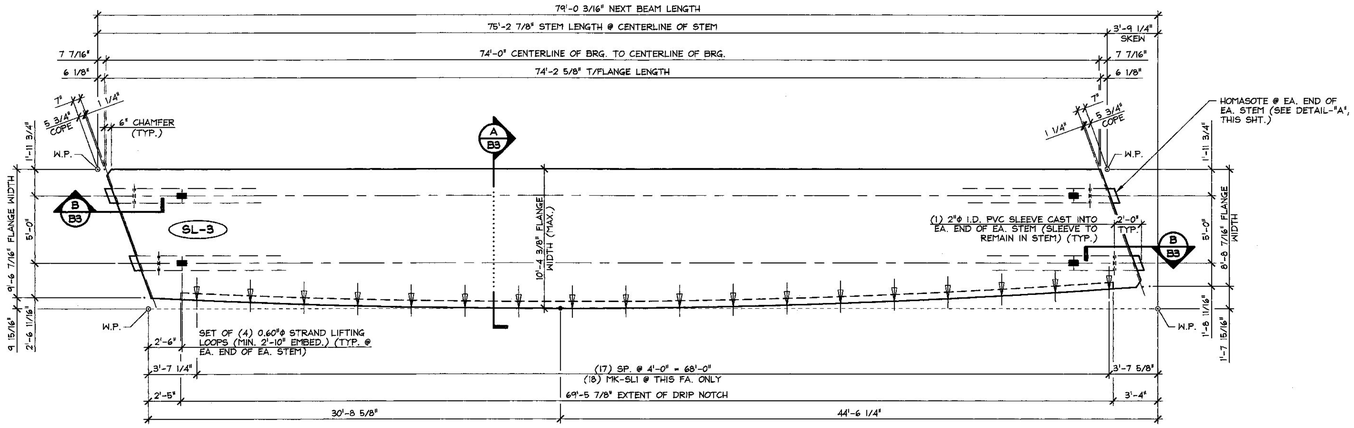

1 / B3 DIMENSIONAL NEXT BEAM PLAN VIEW IN FORM

3/16" = 1'-0"

SHOP NOTE:
SEE SHEET "B4" FOR TOP FLANGE CURVE DIMENSIONS

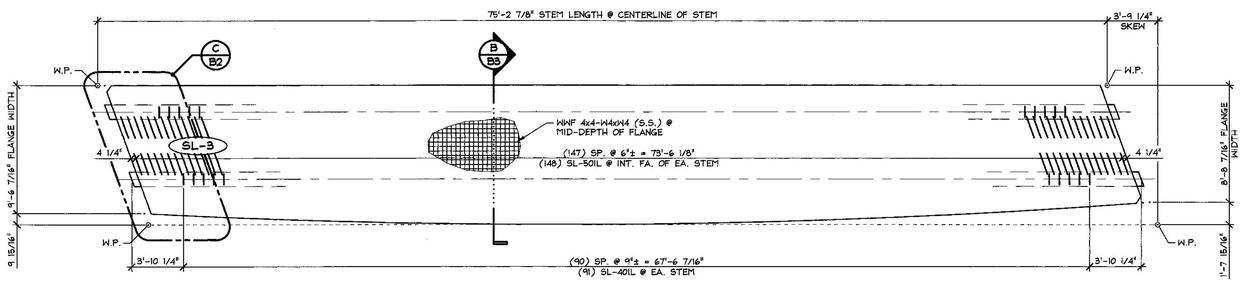

2 / B3 REINFORCING NEXT BEAM PLAN VIEW IN FORM

3/16" = 1'-0"

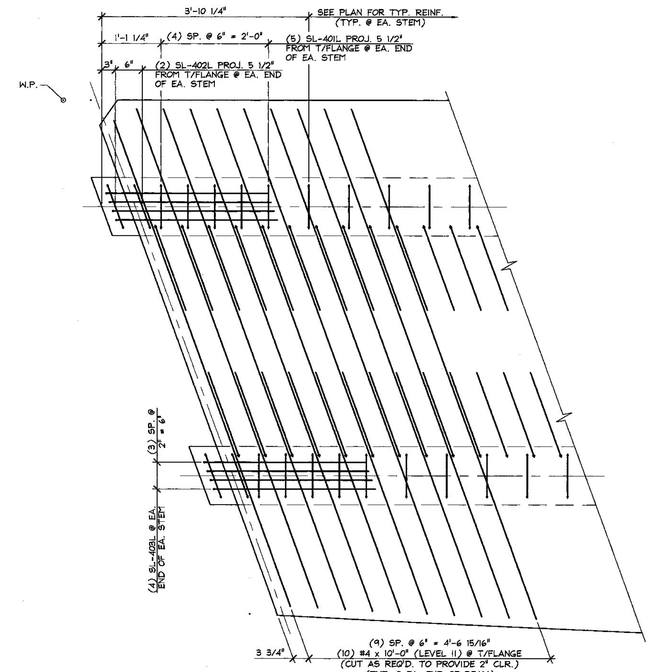

C / B3 END BLOCK REINFORCING PLAN

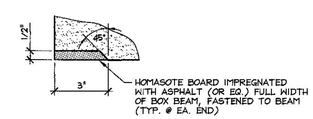

DETAIL - "A"

3" = 1'-0"

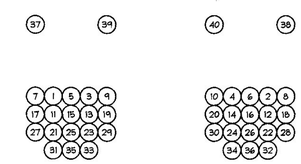

DETENSIONING SCHEDULE

N.T.S.

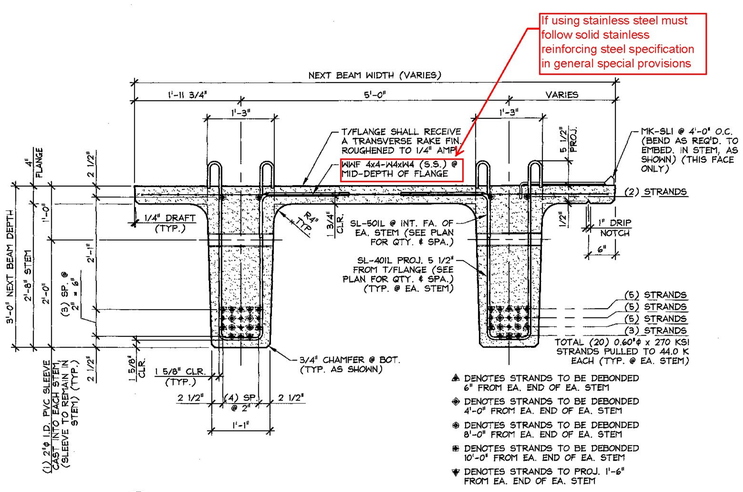

A / B3 DIMENSIONAL & REINFORCING SECTION

3/4" = 1'-0"

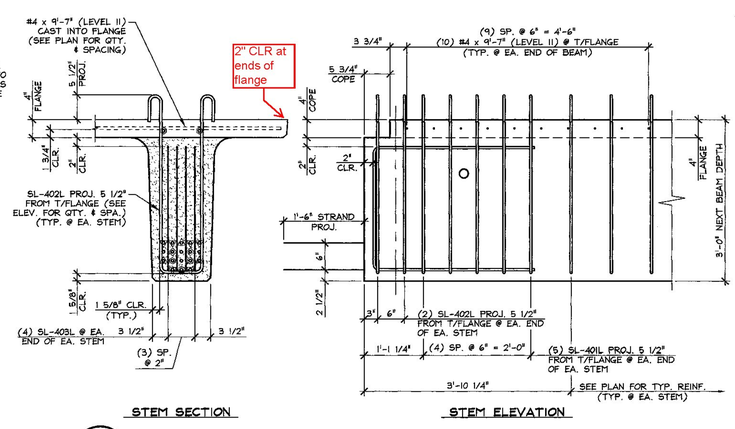

B / B3 END BLOCK STEM REINFORCING DETAILS

3/4" = 1'-0"

Vermont Agency of Transportation
RECEIVED
Next F Beam Shop Drawings Approved.pdf

CK'D BY HIS OK'D BY CLB

September 9, 2013

RESUBMIT Approved AsNoted

BY C. Carlson DATE 10/02/2013

MARK: SL-3	QTY.: 1	WT.: 53.99 T	VOL.: 26.66 cy

MATERIAL LIST / NEXT BEAM

ITEM	MARK	DESCRIPTION	QTY.
1	SL-401L	#4 BENT BAR (LEVEL 1)	202
2	SL-402L	#4 BENT BAR (LEVEL 1)	8
3	SL-403L	#4 BENT BAR (LEVEL 1)	16
4		#4 x 10'-0" (LEVEL 1)	20
5			
6	SL-501L	#5 BENT BAR (LEVEL 1)	296
7			
8			
9			
10	MK-SL1	MODIFIED DAYTON SUPERIOR C-24 45° TYPE 4-APR HANGER (GALV.)	18
11			
12		WWF 4x4-W4xW4 (STAINLESS STEEL) (10'-2" x 77'-8")	1
13			
14		SET OF (4) 0.60"ø x 270 KSI STRAND LIFTING LOOPS	4
15			

APPROVAL STAMP:

J.P. CARRARA & SONS INC.
Precast & Prestress Manufacturer
2464 CASE STR., MIDDLEBURY, VERMONT 05753 Phone:(802)388-6361 Fax:(802)388-9010

AUSTIN CONSTRUCTION
CONTRACTOR
CONCORD, VERMONT

STATE OF VERMONT AGENCY OF TRANSPORTATION
COUNTY OF LAMOILLE

TOWN OF STOWE
ROUTE NO. VT 100, MINOR ARTERIAL
BRIDGE NO.: 208 PROJECT NO.: BRF 029-1(17)

PRESTRESSED NEXT BEAM DETAILS

DATE: SEPT. 6, 2013
SCALE: NOTED
CHKD: - DFTM: B.L.
JOB NO: 23398-013
DWG. NO: B3

F:\VT-Bridges\23398-13 Stowe 100\23398-B3.dwg, 9/6/2013 9:54:35 AM