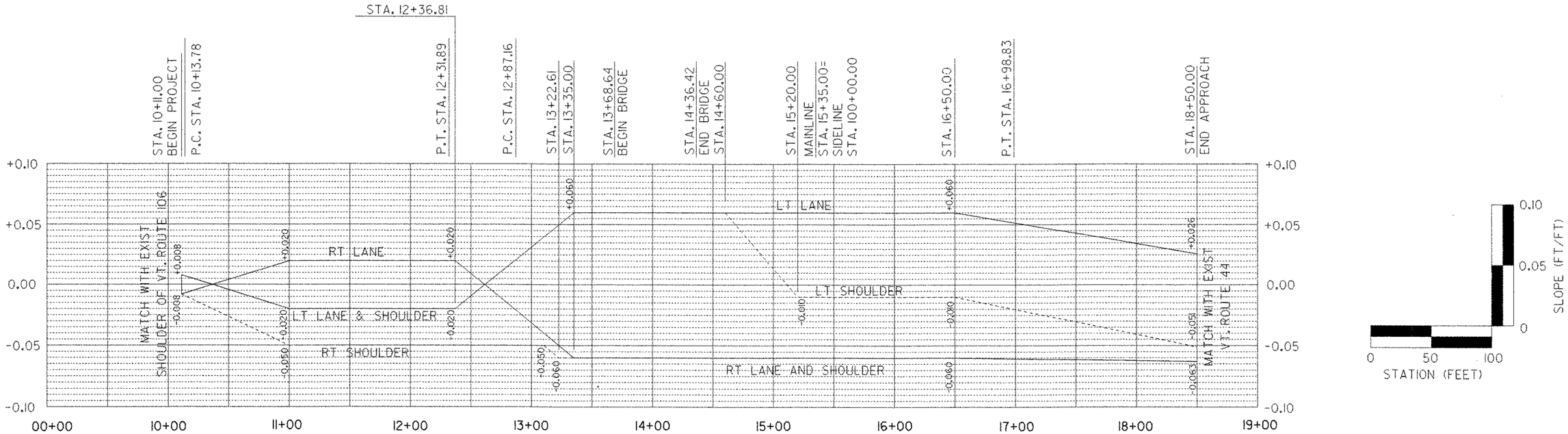


## MAINLINE BANKING DIAGRAM - VT. ROUTE 44

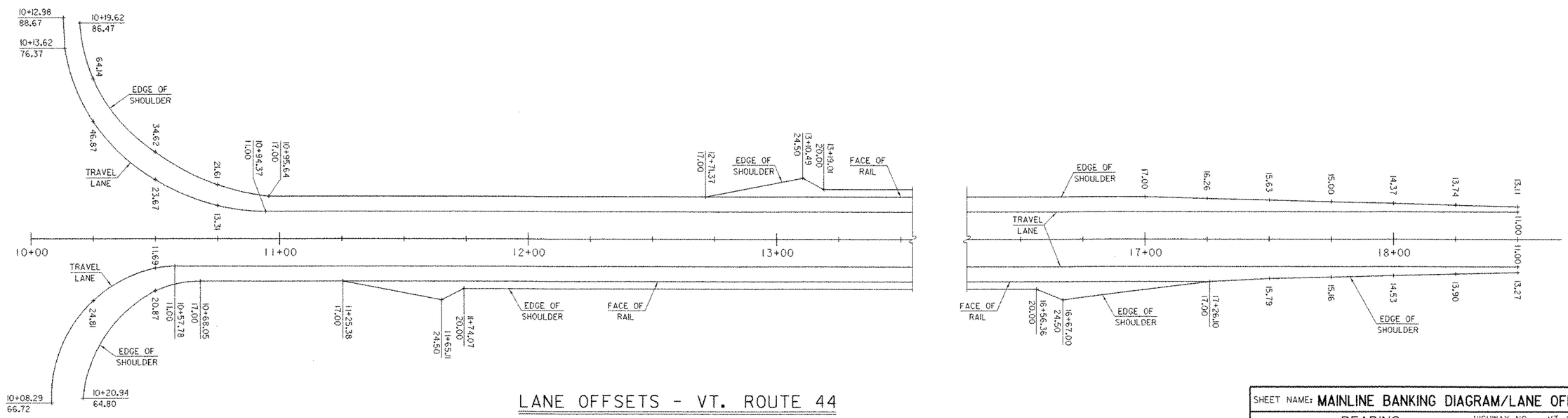


## LANE OFFSETS - VT. ROUTE 44

UNLESS OTHERWISE NOTED, OFFSETS ARE
FROM CENTERLINE AT 25' STATIONS.

20 0 20

SCALE: 1" = 20'-0"

| | |
|---|---|
| SHEET NAME: MAINLINE BANKING DIAGRAM/LANE OFFSETS | |
| PROJECT NAME: READING | HIGHWAY NO.: VT 44 |
| PROJECT NUMBER: BRS 0148(6)S | BRIDGE NO.: 1 |
| | OVER: THE MILL BROOK |
| FILE NAME: PW/85e034/Structures/se034xsl.dgn | PLOT DATE: 17-FEB-2006 |
| PROJECT MANAGER: R. WHITCOMB | DRAWN BY: J. GILMORE |
| DESIGNED BY: C. CARLSON | IPARM NAME: se034bd.I |
| BRIDGE SHEET NUMBER: | SHEET 61 OF 83 |