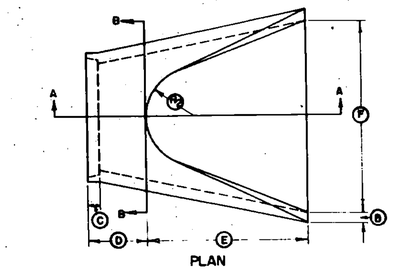

THE USE OF REINFORCED CONCRETE END SECTIONS HAVING VARIATIONS IN BASIC DIMENSIONS FROM THOSE SHOWN ON THIS SHEET SHALL BE SUBJECT TO THE APPROVAL OF THE ENGINEER.

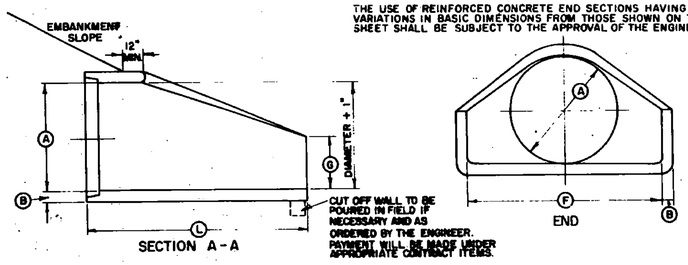

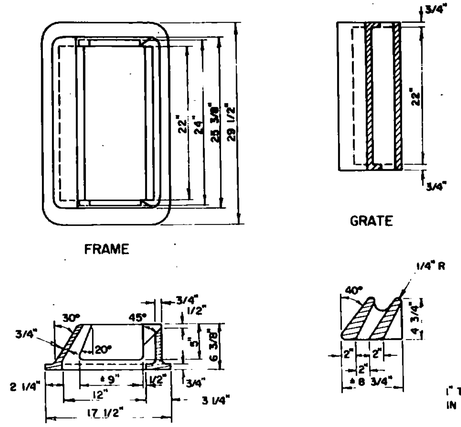

NOTE: JOINTS SHALL BE TONGUE AND GROOVE OR BELL AND SPIGOT AS REQUIRED AND DIMENSIONS SHALL CONFORM TO STANDARD REINFORCED CONCRETE PIPE SPECIFICATIONS.

BASIC DIMENSIONS														
A	B	C	D	E	F	G	H	DIAM. +1"	SLOPE	R_1	R_2	M RATIO $\frac{A-B}{C-D}$	L
12"	2"	SEE NOTE	48 3/8"	24"	24"	4"	19 13/16"	13"	2.7:1	10 1/8"	9"	1.92	6'-0 3/8"
18"	2 1/2"		46"	27"	36"	9"	29"	19"	2.7:1	15 1/2"	12"	1.88	6'-1"
24"	3"		30"	43 1/2"	48"	9 1/2"	33 3/16"	25"	2.8:1	16 13/16"	14"	1.58	6'-1 1/2"
30"	3 1/2"		19 3/4"	54"	60"	12"	37"	31"	2.8:1	18 1/2"	15"	1.41	6'-1 3/4"
36"	4"		34 3/4"	63"	72"	15"	47 13/16"	37"	2.9:1	24 5/16"	20"	1.50	6'-1 3/4"
42"	4 1/2"		35"	63"	78"	21"	53 7/8"	43"	2.9:1	27 1/2"	22"	1.46	6'-2"
48"	5"		26"	72"	87"	24"	59 1/2"	49"	2.9:1	30"	22"	1.40	6'-2"

REINFORCED CONCRETE PIPE END SECTION

* AREA-1 = AREA OF NOMINAL DIAMETER
AREA-2 = AREA THRU SECTION B-B

FURNISHING AND LAYING OF BRICKS SHALL BE INCLUDED IN THE UNIT BID PRICE FOR EACH DROP INLET.

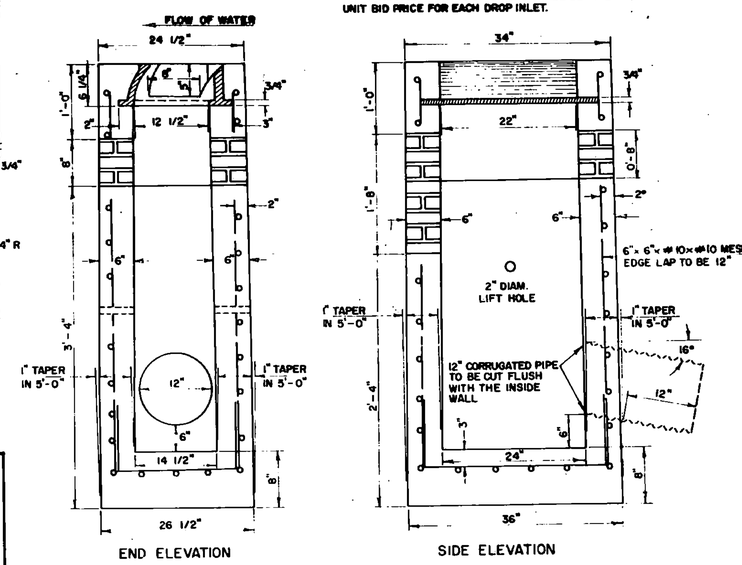

ALLOW FOR 1'-6" OF BRICKS ON SIDE OPPOSITE OUTLET PIPE
0'-6" BRICKS ON OTHER 3 SIDES.

PRECAST REINFORCED CONCRETE CURB DROP INLET WITH CAST IRON GRATE

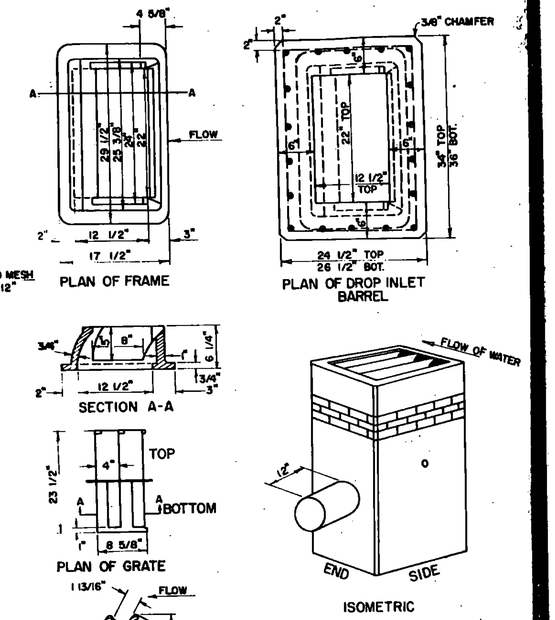

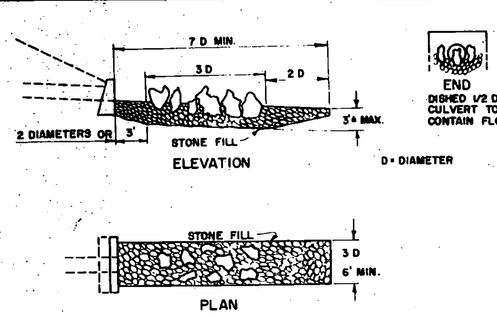

FOR USE ONLY AT LOCATIONS OF VERY HIGH DISCHARGE AND ERODABLE SOIL CONDITIONS.

IRREGULAR COBBLES APPROXIMATING THE MAXIMUM SIZE FOR TYPE OF SPECIFIED STONE FILL TO BE PLACED IN GENERAL PATTERN AS SHOWN. NO STONE TO BE CLOSER THAN 2D TO OUTLET OF PIPE. STONES SHOULD NOT BE PLACED TO DAM FLOW, BUT TO INDUCE TURBULENCE AND REDUCE VELOCITY. PLAN MAY BE ADAPTED TO FIELD CONDITIONS PREVAILING AT OUTLET. WHERE FLOW IS TO ULTIMATELY FOLLOW TOE OF SLOPE, DESIGN MAY BE SHORTENED OR WIDENED TO ACT AS A STILLING BASIN, AND DIRECT FLOW INTO DITCH.

STONES FORMING BREAK SHOULD PROJECT ABOVE AND BELOW SURFACE OF STONE FILL APPROXIMATELY 3/4 THE DIAMETER OF THE PIPE.

STONE FILL TYPE TO BE SPECIFIED ON PLANS.

ENERGY DISSIPATOR FOR CULVERTS

TOP AND BOTTOM COVERS TO BE .064" GALVANIZED IRON OR STEEL, OR .060" ALUMINUM ALLOY.

ALL FITTINGS TO BE SHOP WELDED INCLUDING COVERS.

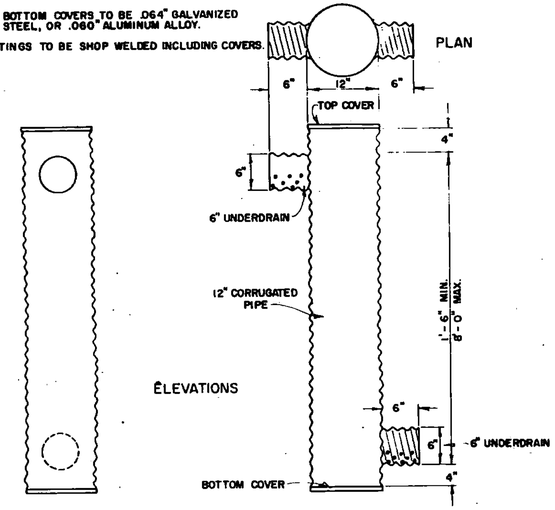

UNDERDRAIN RISER

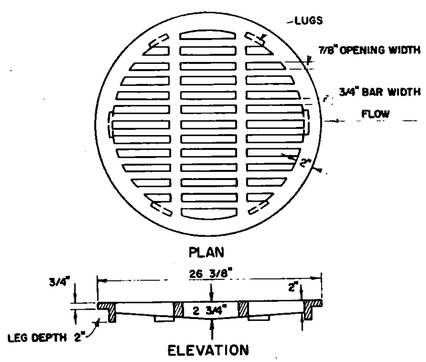

CAST IRON GRATE, TYPE C
TO BE USED IN CONJUNCTION WITH 24" CORRUGATED STEEL PIPE

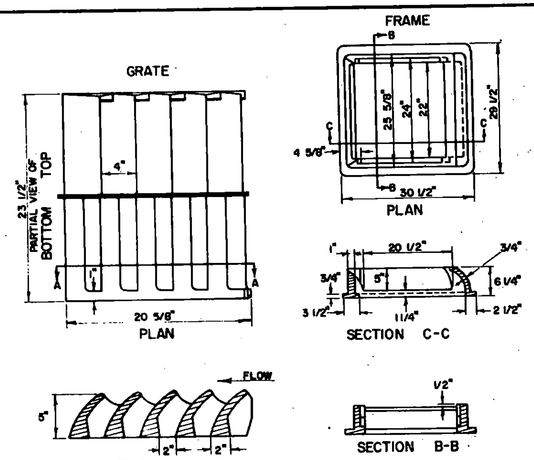

CAST IRON GRATE WITH FRAME, TYPE B

REVISIONS & CORRECTIONS

NOV. 14, 1972 - RCP END SECTION DIMENSION VARIANCE NOTE ADDED.
30 OCT 1985 - REVISED TO CONFORM WITH 1986 SPECIFICATIONS.

APPROVED

DATE Dec. 8, 1971

R. H. Arnold
CHIEF ENGINEER

E. H. Chickney
ASST. CHIEF ENGINEER

G. M. Lane
HIGHWAY ENGINEER

PRECAST REINFORCED CONCRETE CURB DROP INLET WITH CAST IRON GRATE
CAST IRON GRATE, TYPE B
CAST IRON GRATE, TYPE C
UNDERDRAIN RISER
REINFORCED CONCRETE PIPE END SECTION
ENERGY DISSIPATOR FOR CULVERT

VERMONT AGENCY OF TRANSPORTATION

STANDARD

D-16