SPECIAL MARKING DETAILS

Painted Island Detail

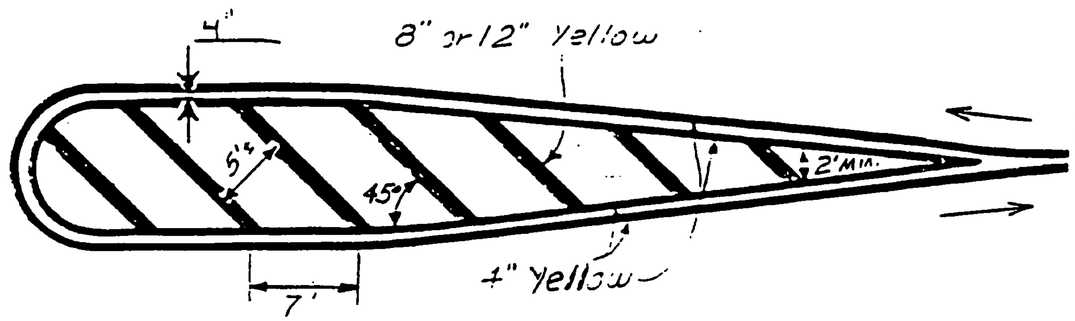

Not to Scale

Gore Marking Detail - Exit

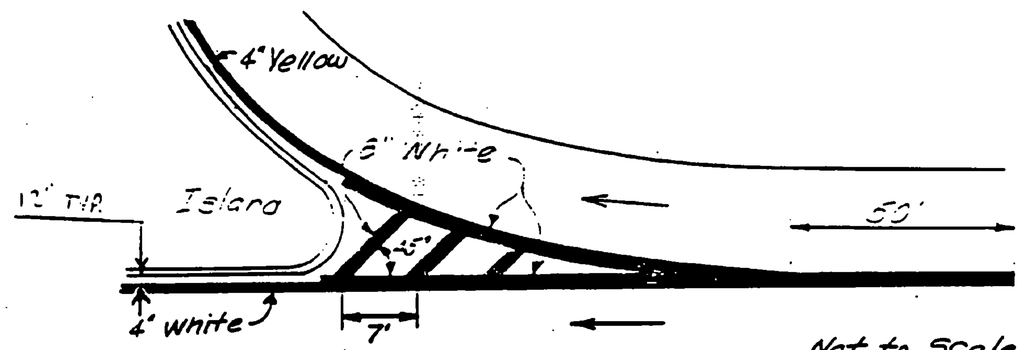

Not to Scale

Turn Lane and Painted Curb Detail

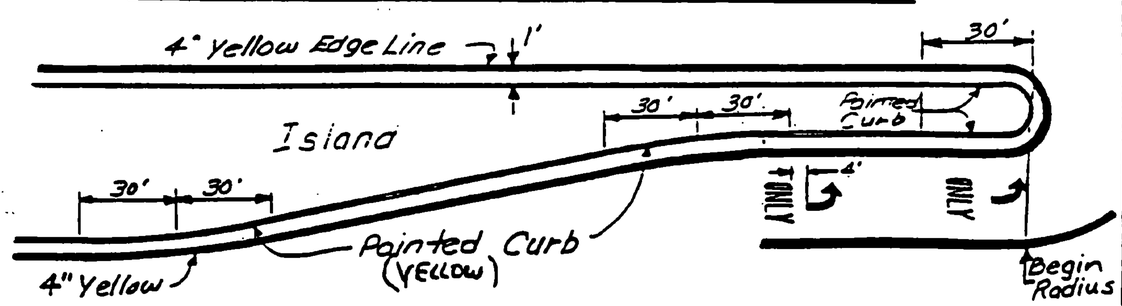

Not to Scale

GEORGIA

F023-1(3)S

SHEET 12 OF 52 SHEETS