| STATION # | MARK | QTY | "A" | "B" | "C" | "D" | "E" | "F" | "G" | "H" |
|---|---|---|---|---|---|---|---|---|---|---|
| 22+32.0 LT | 5C1 | 1 | 22'–3¾ | 18'–9¾ | 3'–6 | 2'–2 | 1'–2 5/16 | 2 @ 5 = 10 | 1'–4 1/16 | 2 @ 5 = 10 |
| 112+12.6 RT | 5C2 | 1 | 22'–3½ | 18'–9½ | 3'–6 | 2'–2 | 1'–2 5/16 | 2 @ 5 = 10 | 1'–4 1/16 | 2 @ 5 = 10 |
| 141+07 LT | 5C3 | 1 | 22'–3¼ | 18'–9¼ | 3'–6 | 2'–2 | 1'–2 5/16 | 2 @ 5 = 10 | 1'–4 1/16 | 2 @ 5 = 10 |
| 11+49.5 LT | 5C4 | 1 | 22'–2¼ | 18'–8¼ | 3'–6 | 2'–2 | 1'–2 5/16 | 2 @ 5 = 10 | 1'–4 1/16 | 2 @ 5 = 10 |
| | | | | | | | | | | |
| | | | | | | | | | | |

| | MARK | "J" | "K" | "L" | "M" | "N" QTY | "N" DIA | "P" | "S" | "T" | 1 | 2 | 3 | 4 | 5 | 6 | 7 | 8 |
|---|---|---|---|---|---|---|---|---|---|---|---|---|---|---|---|---|---|---|
| c | 5C1 | 2½ | 6¾ | 8⅜ | 5/16 | 8 | 1¾ | 3 | 1'–8 1/16 | ¼ | a | b | d | f | k | m | n | h |
| c | 5C2 | 2½ | 6¾ | 8⅜ | 5/16 | 6 | 1¾ | 3 | 1'–8 1/16 | ¼ | aa | bb | d | f | k | m | n | h |
| c | 5C3 | 2½ | 6¾ | 8⅜ | 5/16 | 8 | 1¾ | 3 | 1'–8 1/16 | ¼ | ba | b | d | f | k | m | n | h |
| c | 5C4 | 2½ | 6¾ | 8⅜ | 5/16 | 6 | 1¾ | 3 | 1'–8 1/16 | ¼ | da | bb | d | f | k | m | n | h |
| | | | | | | | | | | | | | | | | | | |
| | | | | | | | | | | | | | | | | | | |

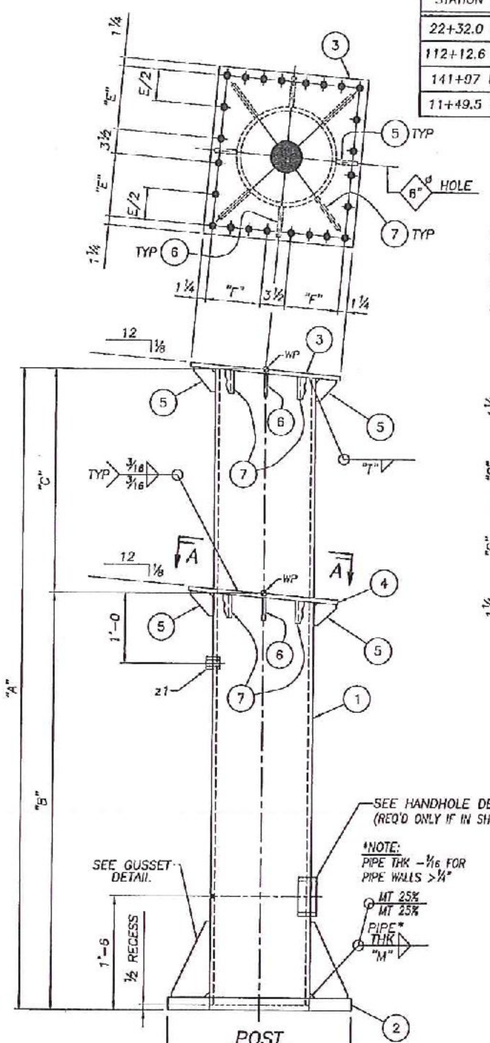


POST

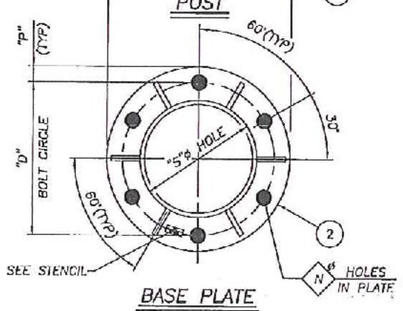


BASE PLATE

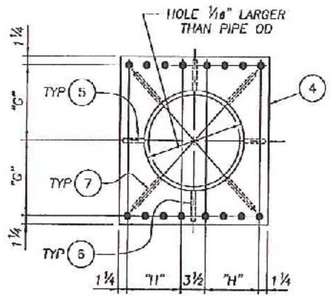


SECTION A–A

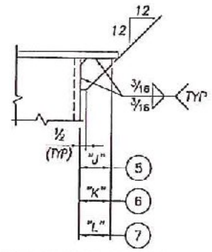


STIFFENER DETAIL

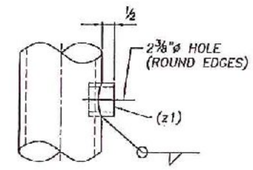


WIRE OUTLET DETAIL

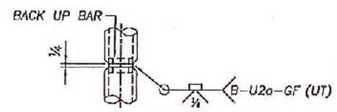


OPTIONAL SPLICE

(FOR WALL THK 5/16" OR GREATER ONLY)

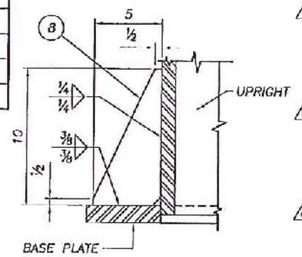


TYP GUSSET DETAIL

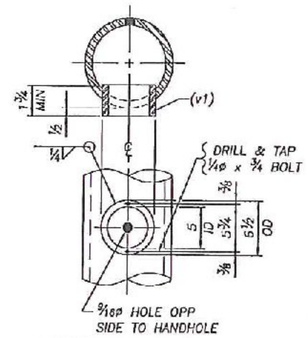


HANDHOLE DETAIL

STENCIL NOTE:

BASE PLATES SHALL BE STENCILED WITH THE POST DIAMETER AND WALL THICKNESS, POST HEIGHT, AND YIELD STRENGTH. ALL LETTERING SHALL BE 1/4" SIZE WITH SINGLE SPACES BETWEEN THE LINES AND WILL NEED THE ABOVE DATA STENCILED ON THE BASE PLATE AS SHOWN BELOW.

## MATERIAL SPEC'S.

- POSTS – STEEL PIPE SHALL MEET THE FOLLOWING SPECIFICATIONS WITH THE PROPERTIES (52 KSI MIN. YIELD, 60 KSI MIN. ULTIMATE TENSILE AND MIN. ELONGATION EQUAL TO 20% IN 2 IN.). API–5L–X52, API–5L–X42, API–5L–X60, ASTM A252 GR. 3, ASTM A500 GR. B/C, OR ASTM A53 GR. B, (YIELD STRENGTH SHALL NOT EXCEED 82 KSI).
- PLATES – ASTM A572, GR. 50
- GALV. – ASTM A123
- PAINT – PER WALPAR COATING SYSTEM #3 – COLOR BLACK
- WELD – AWS SPEC. D1.1 – LATEST REV.
- ALL PIPE SIZES ARE OUTSIDE DIAMETER

ALL HOLES TO BE 13/16ø UNLESS NOTED

C1181–5

| PARTS PER DOOR | PART MARK NO. | NO. OF PIECES PER PARTS | SECTION SIZE | DESCRIPTION OF MATERIAL | LENGTH FEET | LENGTH INCHES | PARTS PER ONE UNIT | |
|---|---|---|---|---|---|---|---|---|
| | 5C1 | 1 | | POST | | | | |
| | a | 1 | PIPE | 20.000 x .250 | 22 | 2⅞ | | |
| c | b | 1 | PL | 1½ x 32 DIA. | – | – | | |
| | d | 1 | PL | ½ x 26 | 2 | 10⅝ | | |
| | f | 1 | PL | ½ x 26 | 2 | 10⅝ | | |
| | k | 4 | PL | ½ x 2½ | 0 | 2½ | | |
| | m | 4 | PL | ½ x 6¾ | 0 | 6¾ | | |
| | n | 8 | PL | ½ x 8⅜ | 0 | 8⅜ | | |
| c | h | 4 | PL | ½ x 5 | 0 | 10 | | |
| | v1 | 1 | PL | 1¾ x 6½ DIA. | – | – | | |
| | z1 | 1 | OP | 1¼ø EX HVY HALF COUPLING | – | – | | |
| | | | | | | | | |
| | 5C2 | 1 | | POST | | | | |
| | aa | 1 | PIPE | 20.000 x .250 | 22 | 2⅞ | | |
| c | bb | 1 | PL | 1½ x 32 DIA. | – | – | | |
| | d | 1 | PL | ½ x 26 | 2 | 10⅝ | | |
| | f | 1 | PL | ½ x 26 | 2 | 10⅝ | | |
| | k | 4 | PL | ½ x 2½ | 0 | 2½ | | |
| | m | 4 | PL | ½ x 6¾ | 0 | 6¾ | | |
| | n | 8 | PL | ½ x 8⅜ | 0 | 8⅜ | | |
| | h | 6 | PL | ½ x 5 | 0 | 10 | | |
| | v1 | 1 | PL | 1¾ x 6½ DIA. | – | – | | |
| | z1 | 1 | OP | 1¼ø EX HVY HALF COUPLING | – | – | | |
| | | | | | | | | |
| | 5C3 | 1 | | POST | | | | |
| | ba | 1 | PIPE | 20.000 x .250 | 22 | 2⅞ | | |
| c | b | 1 | PL | 1½ x 32 DIA. | – | – | | |
| | d | 1 | PL | ½ x 26 | 2 | 10⅝ | | |
| | f | 1 | PL | ½ x 26 | 2 | 10⅝ | | |
| | k | 4 | PL | ½ x 2½ | 0 | 2½ | | |
| | m | 4 | PL | ½ x 6¾ | 0 | 6¾ | | |
| | n | 8 | PL | ½ x 8⅜ | 0 | 8⅜ | | |
| c | h | 4 | PL | ½ x 5 | 0 | 10 | | |
| | v1 | 1 | PL | 1¾ x 6½ DIA. | – | – | | |
| | z1 | 1 | OP | 1¼ø EX HVY HALF COUPLING | – | – | | |
| | | | | | | | | |
| | 5C4 | 1 | | POST | | | | |
| | da | 1 | PIPE | 20.000 x .250 | 22 | 1⅞ | | |
| c | bb | 1 | PL | 1½ x 32 DIA. | – | – | | |
| | d | 1 | PL | ½ x 26 | 2 | 10⅝ | | |
| | f | 1 | PL | ½ x 26 | 2 | 10⅝ | | |
| | k | 4 | PL | ½ x 2½ | 0 | 2½ | | |
| | m | 4 | PL | ½ x 6¾ | 0 | 6¾ | | |
| | n | 8 | PL | ½ x 8⅜ | 0 | 8⅜ | | |
| | h | 6 | PL | ½ x 5 | 0 | 10 | | |
| | v1 | 1 | PL | 1¾ x 6½ DIA. | – | – | | |
| | z1 | 1 | OP | 1¼ø EX HVY HALF COUPLING | – | – | | |

STATE OF VERMONT
BARRAM B. CLEMENTS
4/12/12
NO. 64492
STRUCTURAL I
LICENSED
PROFESSIONAL ENGINEER

| NO: | REVISIONS | DATE | MADE | CHECKED |
|---|---|---|---|---|
| c | FOR APPROVAL, REVISE BASE PL'S, GUSSETS | 4/11/12 | JEFF | RRW |

REF DWG: E2–E5

AASHTO 5th Edition Spec's

Walpar, LLC

POST OFFICE BOX 28650
BIRMINGHAM ALABAMA 35228
4200 JEFFERSON AVENUE
BIRMINGHAM ALABAMA 35221
PHONE (205)–925–4990
FAX (205) 925–7273

C

C3TUPDET

STATE: Vermont
PROJECT: Barre City
PROJ No: FEGC F 026–1(34) C/2
COUNTY: Washington
ROUTE: US–302

SUBJECT: CANTILEVER SIGN SUPPORT
DETAILS OF UPRIGHT
FOR: F.R. Lafayette, Inc.

DRAWN BY: JLS DATED: 8/19/11
CHECKED BY: RRW DATE: 8/22/11
RELEASE FOR CONSTRUCTION: ☐ DWG NO: C1181–5

0