C1181–2

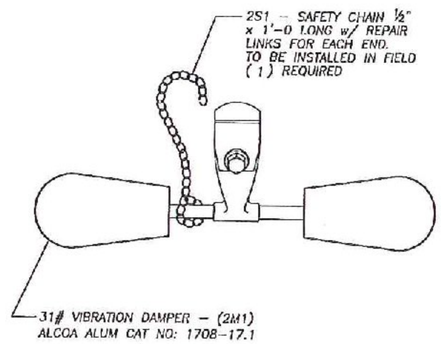

1 ~ DAMPER ASS'Y ~ 2M1

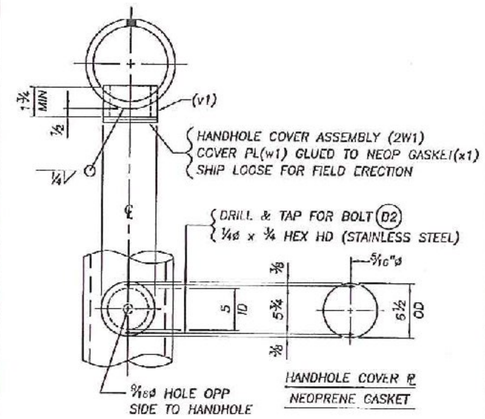

~ HANDHOLE DETAIL ~

PART MARK NO	NO. OF PIECES REQ'D	SECTION SYM	DESCRIPTION OF MATERIAL	LENGTH FEET	LENGTH INCHES	PARTS FOR ONE UNIT
2W1	6	–	HANDHOLE COVER ASSEMBLY			
w1	6	PL	¼ x 6½ DIA.	–	–	1
x1	6	OP	⅛ x 6½ DIA. (NEOP GASKET)	–	–	1

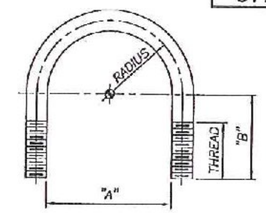

~ U–BOLTS ~

MARK	QTY	DIA	"A"	"B"	RADIUS	THDS	MATERIAL
U2	44	½	3	3½	1¾	2	A307 GALV

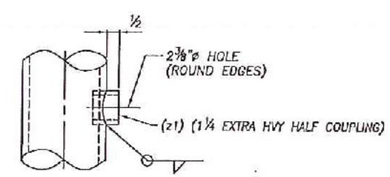

~ WIRE OUTLET DETAIL ~

STATE OF VERMONT
BARBARA B. CLEMENTS
8/22/11
NO. 64492
STRUCTURAL
LICENSED PROFESSIONAL ENGINEER

AASHTO 5th Edition Spec's

REF DWGS: E1 THRU E5
MAT'L SPECS: AS NOTED
WELD SPECS: AWS D1.1 ~ LATEST REV.

Walpar, LLC

POST OFFICE BOX 28650
BIRMINGHAM ALABAMA 35228
1200 JEFFERSON AVENUE
BIRMINGHAM ALABAMA 35221
PHONE (205)–925–1990
FAX (205) 925–7273

STATE:	Vermont
PROJECT:	Barre City
PROJ No:	FEGC F 026–1(34) C/2
COUNTY:	Washington
ROUTE:	US–302
SUBJECT:	SIGN STRUCTURES MISC DETAILS
FOR:	F.R. Lafayette, Inc.
DRAWN BY: JLS	DATE: 8/18/11
CHECKED BY: RRW	DATE: 8/22/11
RELEASE FOR CONSTRUCTION: ☐	DWG NO: C1181–2

NO:	REVISIONS	DATE	MADE	CHECKED
A	FOR APPROVAL	8/22/11	JLS	RRW

DWG–2