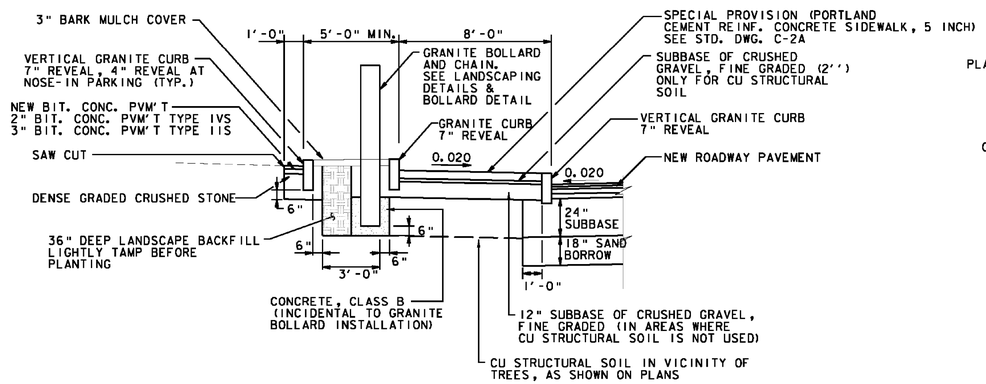

SECTION VIEW

GRAINTE POST DETAIL FOR PLANTING BED AT PLAZA

N.T.S.

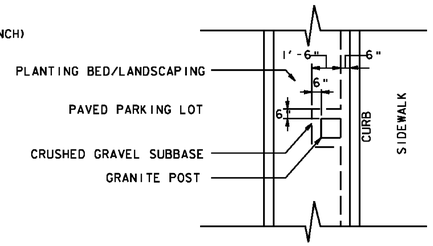

PLAN VIEW

GRANITE POST DETAIL AT PLAZA

N.T.S.

STA. 116+76 LT - 122+67 LT

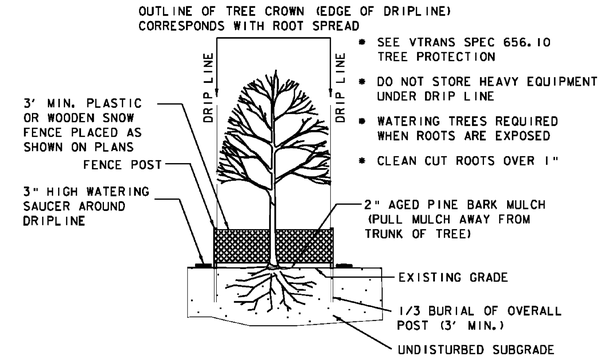

- SEE VTRANS SPEC 656.10 TREE PROTECTION
- DO NOT STORE HEAVY EQUIPMENT UNDER DRIP LINE
- WATERING TREES REQUIRED WHEN ROOTS ARE EXPOSED
- CLEAN CUT ROOTS OVER 1"

TREE PROTECTION ZONE (TPZ) FOR EXISTING TREES

SEE LANDSCAPING PLANS FOR LOCATIONS

N.T.S.

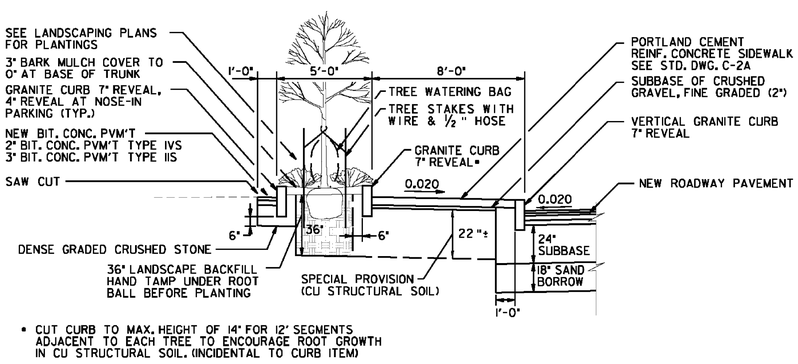

* CUT CURB TO MAX. HEIGHT OF 14" FOR 12' SEGMENTS ADJACENT TO EACH TREE TO ENCOURAGE ROOT GROWTH IN CU STRUCTURAL SOIL. (INCIDENTAL TO CURB ITEM)

SECTION VIEW

TREE PLANTING BED AT PLAZA WITH CU STRUCTURAL SOIL UNDER SIDEWALK

N.T.S.

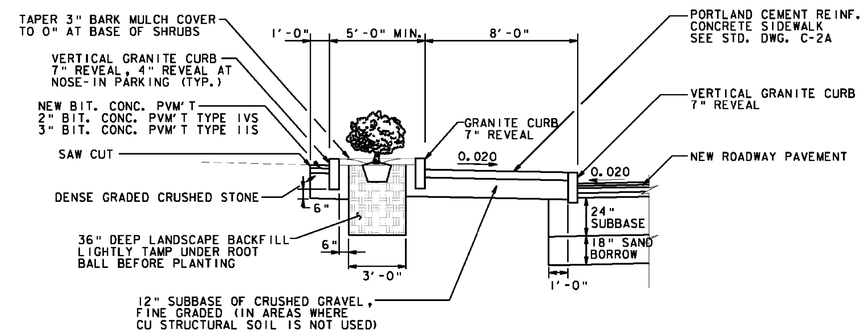

SECTION VIEW

PLANTING BED AT PLAZA WITHOUT CU STRUCTURAL SOIL UNDER SIDEWALK

N.T.S.

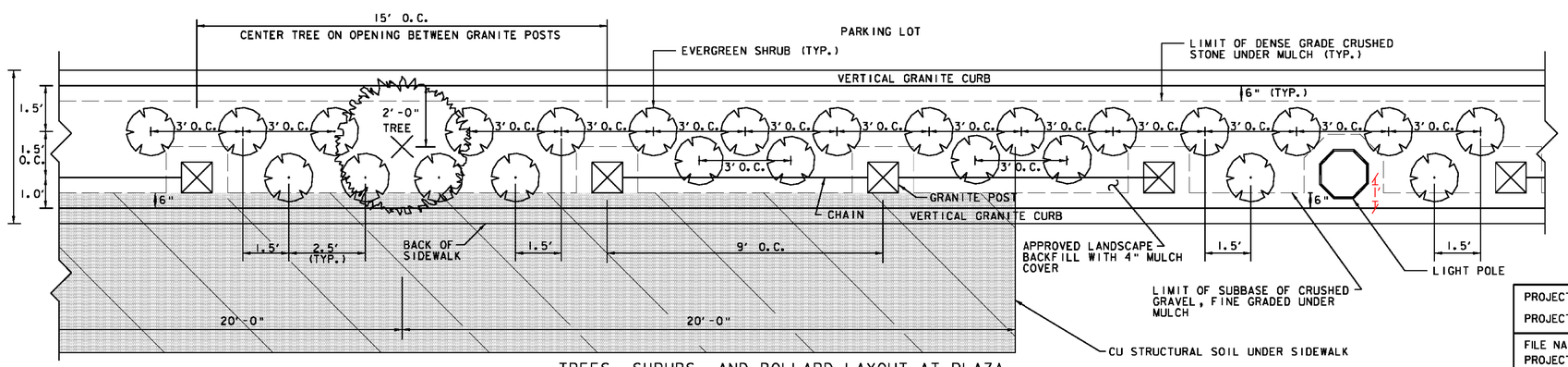

TREES, SHRUBS, AND BOLLARD LAYOUT AT PLAZA

N.T.S.

VHB Vanasse Hangen Brustlin, Inc.

PROJECT NAME: BARRE CITY	
PROJECT NUMBER: FEGC F 026-1(34) C/2	
FILE NAME: 85b010_LDSDET_C2	PLOT DATE: 3/21/2011
PROJECT LEADER: G. BAKOS	DRAWN BY: DMP / JAR
DESIGNED BY: DMP / MDS	CHECKED BY:
LANDSCAPING DETAILS #2	SHEET 92 OF 339