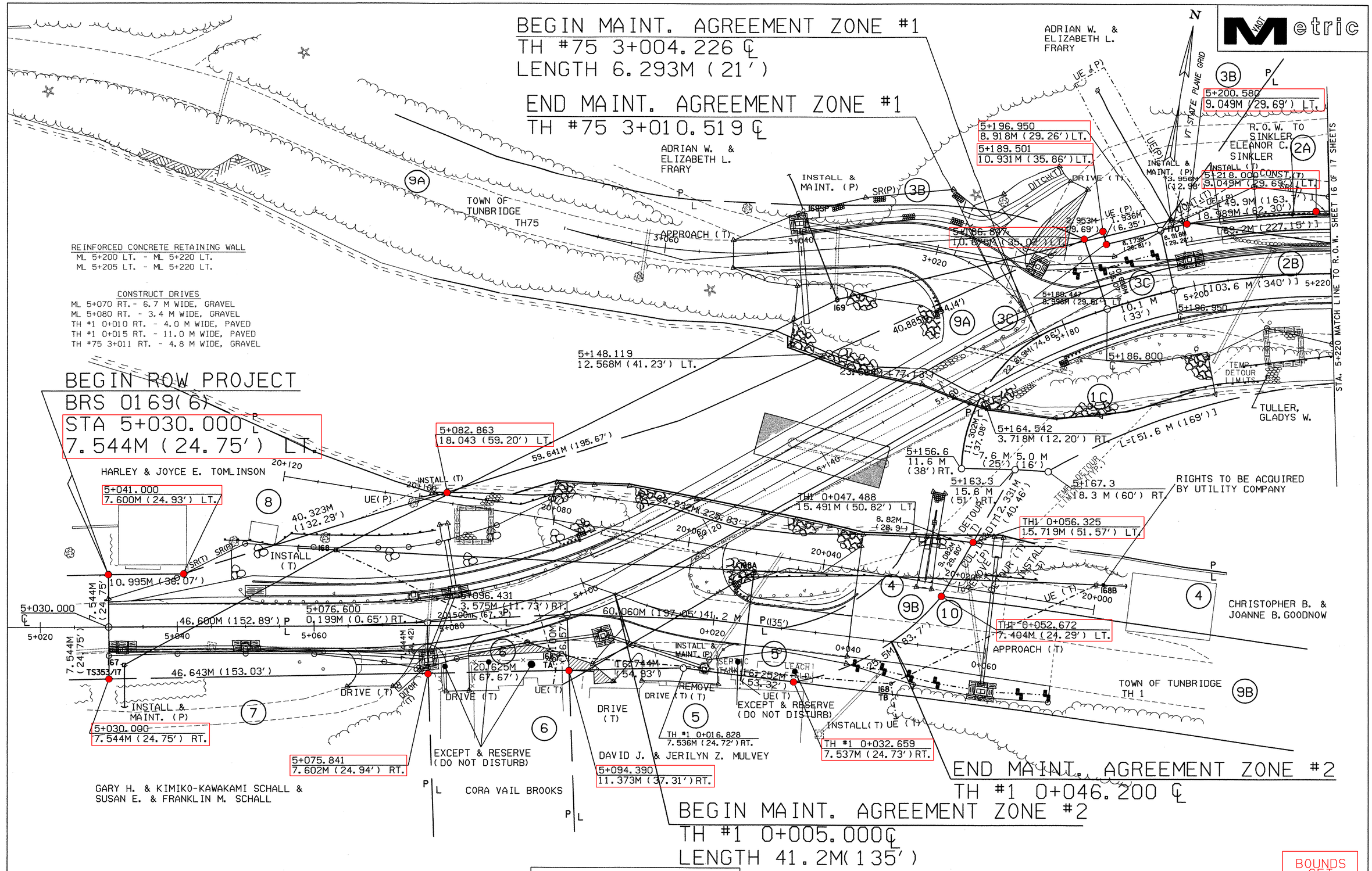

FOR EROSION CONTROL DETAILS AND NEW DRAINAGE NOTES SEE R.O.W. SHEET 10 OF 17

LINES SHOWN ON THIS PLAN AS EXISTING PROPERTY LINES (P/L) ARE BELIEVED TO BE ACCURATE BUT SHOULD NOT BE RELIED UPON FOR PURPOSES UNRELATED TO THE STATE OF VERMONT'S ACQUISITION OF LAND AND RIGHTS FOR THIS PROJECT.

0 10 20 30
SCALE IN METERS

/84e063/str/re063rL1.1

BOUNDS SET

PROJECT NAME: TUNBRIDGE	
PROJECT NUMBER: BRS 0169(6)	
FILE NAME: /84e063/str/se063bdr.dgn	PLOT DATE: 30-MAR-2005
PROJECT LEADER: PORTALUPI	DRAWN BY: L. BULLOCK
DESIGNED BY:	CHECKED BY:
R.O.W. SHEET 15 OF 17 SHEETS	SHEET 23 OF 128

END ROW PROJECT
BRS 0169(6)
STA. 5+340.000 7.544M (24.75') LT.

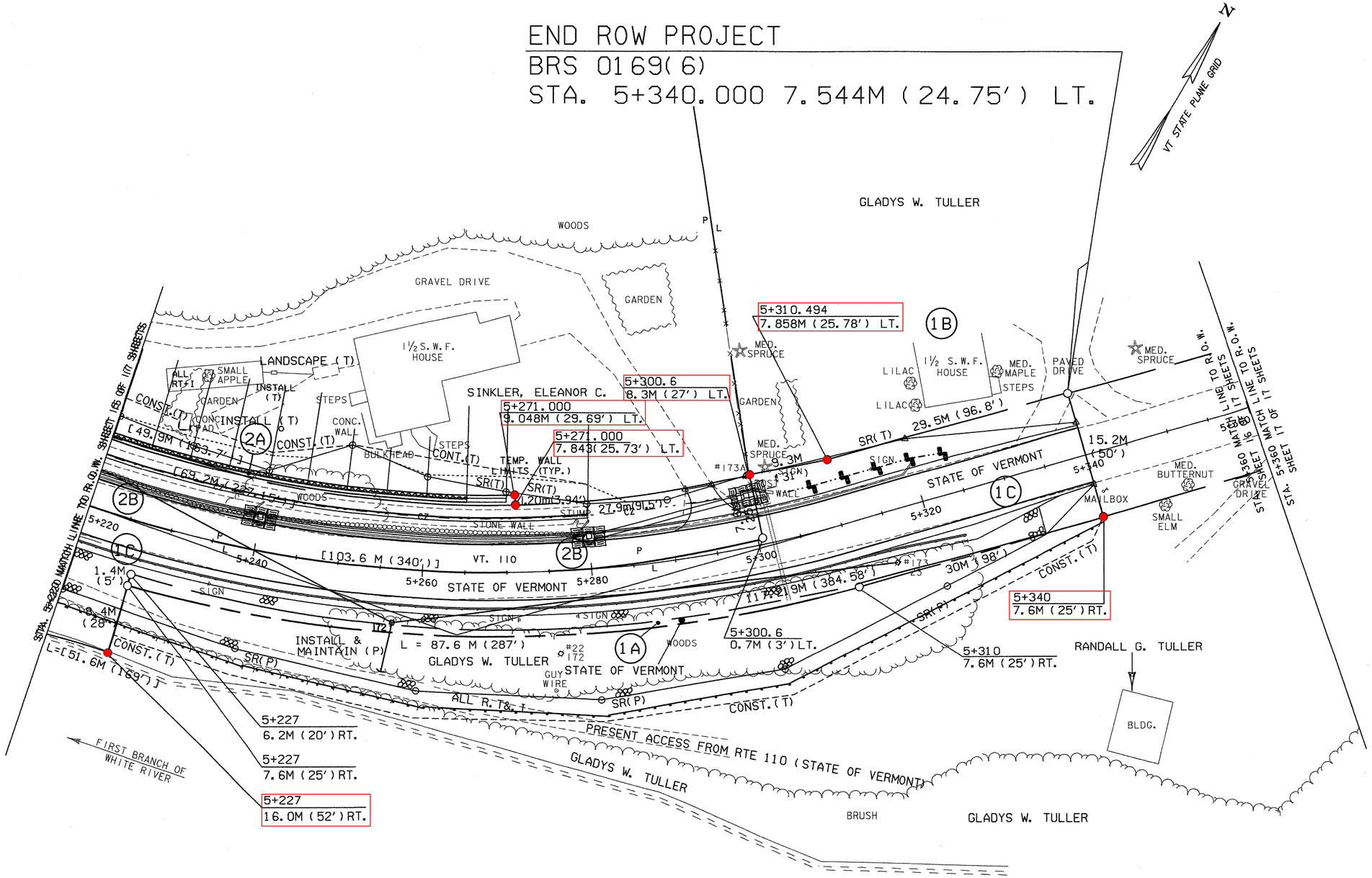

FOR EROSION CONTROL DETAILS AND NEW DRAINAGE NOTES SEE R.O.W. SHEET 11 OF 17

LINES SHOWN ON THIS PLAN AS EXISTING PROPERTY LINES (P/L) ARE BELIEVED TO BE ACCURATE BUT SHOULD NOT BE RELIED UPON FOR PURPOSES UNRELATED TO THE STATE OF VERMONT'S ACQUISITION OF LAND AND RIGHTS FOR THIS PROJECT.

BOUNDS SET

0 10 20 30

SCALE IN METERS

/84e063/str/re063rb2.i

PROJECT NAME: TUNBRIDGE
PROJECT NUMBER: BRS 0169(6)

FILE NAME: /84e063/str/se063bdr.dgn
PROJECT LEADER: PORTALUPI
DESIGNED BY:
PLOT DATE: 30-MAR-2005
DRAWN BY: L. BULLOCK
CHECKED BY:

R.O.W. SHEET 16 OF 17 SHEETS

VAOT Metric

TH #75 CURVE #2 DATA
△ = 19°-18'-18" RT.
R = 104.000
T = 17.688
L = 35.041
E = 1.493
BANK = REMOVE CROWN

CAST-IN-PLACE CONCRETE CURB, TYPE B
ML 5+050 LT. - ML 5+108 LT.
TH #75 3+008 RT. - ML 5+220 LT.
TH #75 3+015 RT. - TH #75 3+040 RT.

RELOCATE MAILBOX, SINGLE SUPPORT
TH #1 0+020 LT. (2)

PORTLAND CEMENT CONCRETE SIDEWALK, 125 MM
ML 5+050 LT. - ML 5+108 LT.

CONST. SIDEWALK RAMP, TYPE I W/ DETECTABLE WARNING SURFACE
ML 5+050 LT.
ML 5+163 LT.

REMOVAL OF EXISTING CURB
TH #1 0+021 RT.

CAST-IN-PLACE CONCRETE CURB, TYPE A (100 MM REVEAL)
ML 5+030 RT. - TH #1 ~~0+024 RT.~~ 0+006.3
TH #1 0+023.4-0+045.3 RT

TH #75 CURVE #1 DATA
△ = 69°-45'-25" LT.
R = 22.878
T = 15.947
L = 27.853
E = 5.009
BANK = VARIES

COLD PLANING - BITUMINOUS PAVEMENT
ML 5+030 - ML 5+044

REINFORCED CONCRETE RETAINING WALL
ML 5+200 LT. - ML 5+220 LT.
TH #1 0+022 - 0+034 LT.

RETAINING WALL
(SOLDIER PILE RETAINING WALL)
ML 5+205 LT. - ML 5+220 LT.

CONSTRUCT DRIVES
ML 5+070 RT. - 6.7 M WIDE, GRAVEL
ML 5+080 RT. - 3.4 M WIDE, GRAVEL
TH #1 0+010 RT. - 4.0 M WIDE, PAVED
TH #1 0+015 RT. - 11.0 M WIDE, PAVED
TH #1 0+050 LT. - 3.8 M WIDE, GRASSED-GRAVEL
SEE SHEETS 47.117 & 118 FOR DETAILS
TH #75 3+011 RT. - 4.8 M WIDE, GRAVEL

VT. 110 CURVE #1 DATA
△ = 29°-26'-50" LT.
R = 100.000
T = 26.279
L = 51.395
E = 3.395
BANK = 0.020 M/M

ML POC 5+115.000 =
CHANNEL POT 20+062.000
△ = 39°00'00" RT

DETOUR CURVE #2 DATA
△ = 44°-55'-40" RT.
R = 40.000
T = 16.539
L = 31.365
E = 3.284

VT 110 CURVE #2 DATA
△ = 29°-07'-22" RT.
R = 100.000
T = 25.976
L = 50.829
E = 3.319
BANK = 0.040 M/M

DETOUR CURVE #1 DATA
△ = 45°-14'-41" LT.
R = 40.000
T = 16.669
L = 32.987
E = 3.334

TH #1 CURVE DATA
△ = 12°-21'-19" LT.
R = 55.000
T = 5.953
L = 11.860
E = 0.321
BANK = VARIES

STONE FILL, TYPE I
TH #75 3+013 RT. - TH #75 3+040 RT.

STONE FILL, TYPE II
ML 5+048 LT. - ML 5+102 LT.
TH #1 0+024 LT. - TH #1 0+045 LT.

STONE FILL, TYPE IV
CHANNEL 20+028 RT. - 20+081 RT.
ML 5+131 LT. - ML 5+149 RT.
ML 5+142 LT. - ML 5+200 LT.

DRY RUBBLE MASONRY
(FIRE DEPARTMENT ACCESS TO RIVER)
SEE SHEET 125 FOR DETAILS
CHANNEL 20+046 RT. - 20+050 RT.

REMOVAL OF SURFACES AND PAVEMENTS (PLACE 100MM TOPSOIL, SEED, FERTILIZER, LIMESTONE AND HAY MULCH)
ML 5+082 RT. - TH#1 0+009 RT.
ML 5+180 LT. - ML 5+190 LT.

SNOW FENCE (MOD.)
DETOUR 30+010 RT. - DETOUR 30+040 RT.
PLACEMENT TO BE COORDINATED WITH ABUTTING PROPERTY OWNER.

GUARDRAIL APPROACH SECTION, NETC 2 RAIL (MOD.)
ML 5+091 LT. - ML 5+102 LT.
ML 5+178 RT. - ML 5+189 RT.
TH #1 0+034 LT. - TH #1 0+040 LT.
(INCL FLARED BACK SECTION)
TH #75 3+015 LT. - TH #75 3+026 LT.

REMOVAL AND DISPOSAL OF GUARDRAIL
ML 5+049 LT. - ML 5+107 LT.
ML 5+167 LT. - TH #75 3+008 LT.
ML 5+177 RT. - ML 5+202 RT.
TH #1 0+014 LT. - TH #1 0+038 LT.

GATE FOR CHAIN-LINK FENCE, 1.2 M
TH #1 0+047 - TH #1 0+050 LT.
6.1 M OPENING - DOUBLE GATE

CAST IN PLACE CONCRETE BRIDGE RAIL
ML 5+102 LT. - TH #75 3+015 LT.
TH #1 0+022 LT. - ML 5+178 RT.

BOX BEAM GUARDRAIL (MOD.)
ML 5+051 LT. - ML 5+091 LT.
TH #1 0+040 LT. - TH #1 0+048 LT.
TH #75 3+026 LT. - TH #75 3+043 LT.
ML 5+189 RT. - ML 5+220 RT.

PLANK RAIL
CHANNEL 20+025 LT. - 20+046 LT.
CHANNEL 20+050 LT.

REMOVAL AND DISPOSAL OF GUIDE POSTS
TH #1 0+022 RT.
ML 5+185 LT.
ML 5+210 RT.

BRIDGE RAIL - GALV. BOX BEAM/PEDESTRIAN (MOD.)
TH #1 0+022 LT. - 0+034 LT.

BRIDGE RAIL - 1 RAIL GALV. BOX BEAM (MOD.- HAND RAIL)
ML 5+106 - 5+163 LT.
ML 5+119.22 - 5+174 RT.

CEDAR LOG RAIL (MOD.)
ML 5+200 - 5+220 LT. (ABOVE LOWER WALL)
ML 5+205 - 5+220 LT. (ABOVE UPPER WALL)

NOTE: SEE DRAINAGE SHEET 48

0 10 20 30
SCALE IN METERS

PROJECT NAME: TUNBRIDGE
PROJECT NUMBER: BRS 0169(6)

FILE NAME: se063bdr.dgn
PROJECT LEADER: W. HUSBAND
DESIGNED BY: VTRANS / CLD
PLOT DATE: 4/27/2005
DRAWN BY: J. WARNER
CHECKED BY:
SHEET 38 OF 128

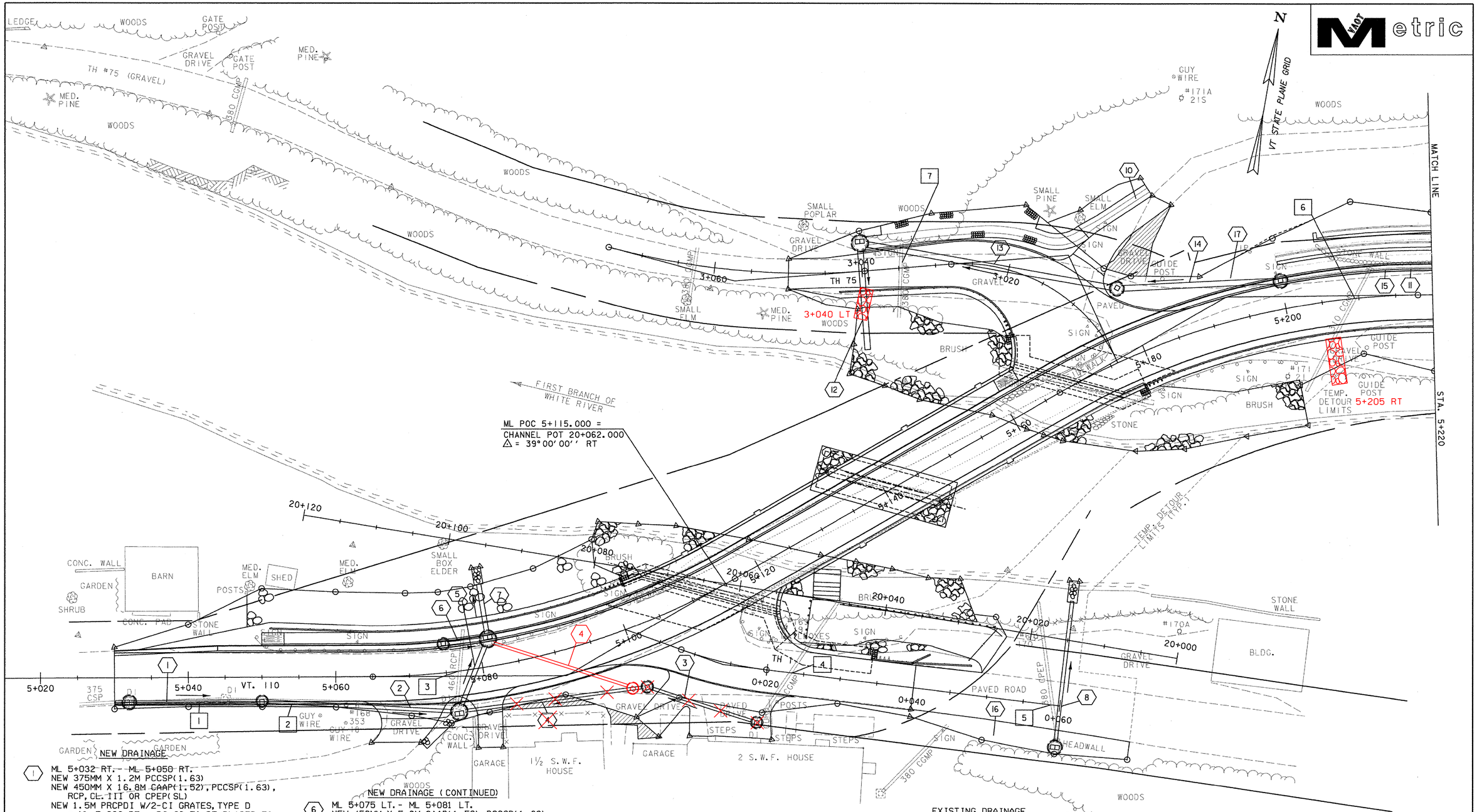

1. ML 5+032 RT. - ML 5+050 RT.
NEW 375MM X 1.2M PCCSP(1.63)
NEW 450MM X 16.8M ~~CAAP(1.52)~~, PCCSP(1.63), RCP, CL. III OR CPEP(SL)
NEW 1.5M PRCPDI W/2-CI GRATES, TYPE D @ ML 5+032 RT. DI IS TO BE PLACED TO INTERCEPT CULVERT FROM EXISTING SYSTEM

2. ML 5+050 RT. - ML 5+076 RT.
NEW 450MM X 25.6M CAAP(1.52), PCCSP(1.63), RCP, CL. III OR CPEP(SL)
NEW PRCPDI W/CI GRATE, TYPE D @ ML 5+050 RT.

3. ~~TH 1 0+019 RT. 7.2M - ML 5+100 RT. 8.2M~~
~~NEW 375MM X 14.6M CAAP(1.52), PCCSP(1.63), RCP, CL. III OR CPEP(SL)~~
~~NEW PRCPDI W/CI GRATE, TYPE D @ TH 1 0+019 RT.~~
~~CONNECT EXISTING FOUNDATION DRAIN TO PRCPDI @ TH 1 0+019 RT.~~

4. ~~ML 5+100 RT. 8.2M - ML 5+076 RT. 5.4M~~
~~NEW 375MM X 24.6M CAAP(1.52), PCCSP(1.63), RCP, CL. III OR CPEP(SL)~~
~~NEW PRCPDI W/CI GRATE, TYPE D @ ML 5+100 RT.~~

5. ML 5+076 RT. 5.4 M - ML 5+081 LT.
NEW 600MM X 9.2M CAAP(1.52), PCCSP(1.63), RCP, CL. III OR CPEP(SL)
NEW 1.8M PRCPDI W/2-CI GRATES, TYPE A @ ML 5+076 RT.
ML 5+071 RT. - ML 5+076 RT.
CONSTRUCT INLET DITCH W/STONE FILL, TYPE I

6. ML 5+075 LT. - ML 5+081 LT.
NEW 450MM X 5.0M CAAP(1.52), PCCSP(1.63), RCP, CL. III OR CPEP(SL)
NEW PRCPDI W/CI GRATE, TYPE D @ ML 5+075 LT.

7. ML 5+081 LT.
NEW 600MM X 7.0M CAAP(1.52) OR PCCSP(1.63)
NEW 1.8M PRCPDI W/2-CI GRATES, TYPE D @ ML 5+081 LT.
STONE FILL, TYPE II, PAD AT OUTLET

8. TH 1 0+060 RT. 5.6 M - LT 14.0 M
NEW 450MM X 18.8M CAAP(1.52) OR PCCSP(1.63)
NEW 1.5M PRCPDI W/2-CI GRATES, TYPE A @ TH 1 0+060 RT.
STONE FILL, TYPE III, PAD AT OUTLET

9. INTENTIONALLY LEFT BLANK

10. TH 75 3+012 RT.
CONSTRUCT SPECIAL DITCH W/EROSION MATTING

11. ML 5+200 LT. - ML 5+240 LT.
NEW 150MM X 40.0M UNDERDRAIN W/FLUSHING BASIN @ 5+240 LT.

12. TH 75 3+040 RT. 3.8 - LT. 10.6
NEW 750MM X 14.0M CAAP(1.91) OR PCCSP(2.01)
NEW 1.8M PRCPDI W/2-CI GRATES, TYPE A @ TH 75 3+040 RT.

13. ML 5+180 LT. 9.2 M - TH 75 3+040 RT. 3.8 M
NEW 750MM X 34.2M CAAP(1.91), PCCSP(2.01), RCP, CL. III OR CPEP(SL)
NEW 1.5 PRCPDI W/CI GRATE, TYPE D @ ML 5+180 LT.

14. ML 5+180 LT. - ML 5+200 LT.
NEW 750MM X 21.2M CAAP(1.91), PCCSP(2.01), RCP, CL. III OR CPEP(SL)
NEW 1.5M PRCPDI W/CI GRATE, TYPE D @ ML 5+200 LT.

15. ML 5+200 LT. - ML 5+240 LT.
NEW 600MM X 39.0M CAAP(1.52), PCCSP(1.63), RCP, CL. III OR CPEP(SL)
NEW PRCPDI W/CI GRATE, TYPE E @ ML 5+240 LT.

16. TH 1 0+024 RT. - TH 1 0+070 RT.
CONSTRUCT SPECIAL DITCH W/EROSION MATTING

17. ML 5+180 LT. - ML 5+195 LT.
CONSTRUCT SPECIAL DITCH W/EROSION MATTING

EXISTING DRAINAGE

1. ML 5+032 RT. - ML 5+045 RT.
EXISTING 450MM PIPE W/DI - REMOVE

2. ML 5+045 RT. - ML 5+076 RT.
EXISTING 450MM PIPE W/DI - REMOVE

3. ML 5+076 RT. - ML 5+078 LT.
EXISTING 460MM PIPE W/DI - REMOVE

4. TH 1 0+019 RT. - TH 1 0+029 LT.
EXISTING PIPE W/DI - REMOVE

5. TH 1 0+056 LT. - TH 1 0+060 RT.
EXISTING 380MM PIPE W/HEADWALL - REMOVE

6. ML 5+201 RT. - 5+212 LT.
EXISTING 310MM PIPE W/HEADWALL - REMOVE

7. TH 75 3+035 C/L
EXISTING 380MM PIPE - REMOVE

0 10 20 30
SCALE IN METERS

4. ML 5+098 RT. 7.7M - ML 5+081 LT
NEW 450MM X 19.1M CAAP
NEW PRCPDI W/ CI GRATE, TYPE D @ 5+098 RT.

DRAINAGE SHEET 1

PROJECT NAME: TUNBRIDGE
PROJECT NUMBER: BRS 0169(6)

FILE NAME: se063bdr.dgn
PROJECT LEADER: W. HUSBAND
DESIGNED BY: J. WARNER
PLOT DATE: 4/21/2005
DRAWN BY: J. WARNER
CHECKED BY:
SHEET 48 OF 128

Metric

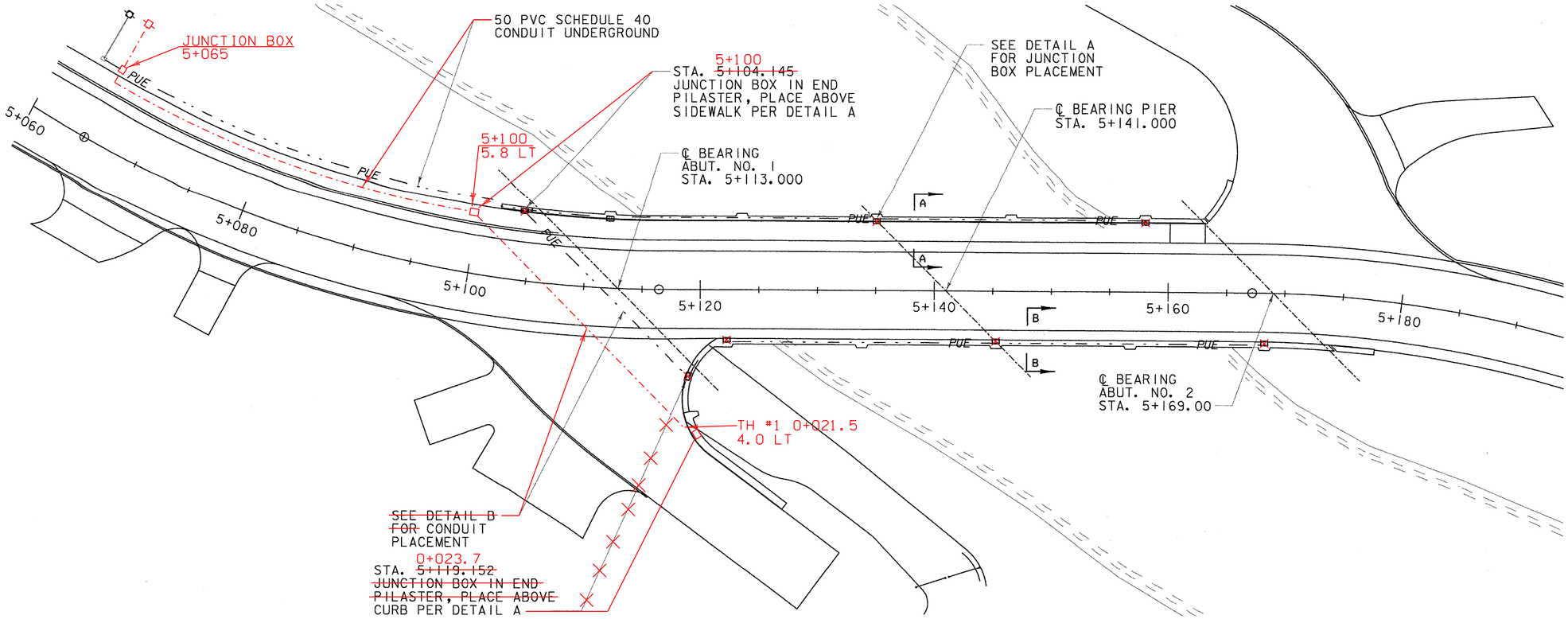

LIGHTING PLAN
SCALE 1:200

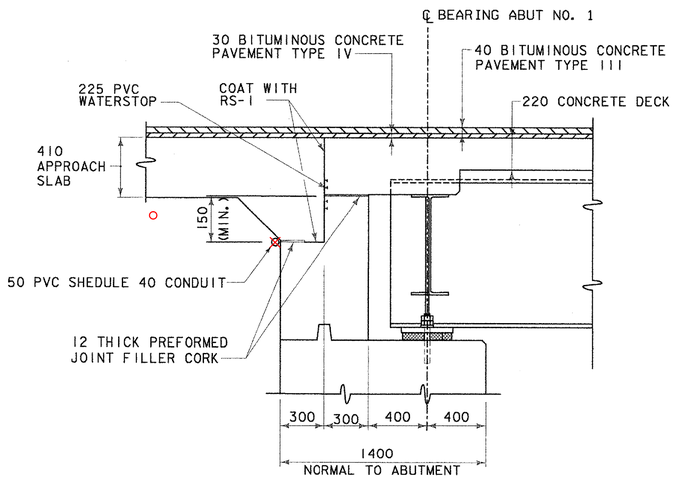

DETAIL B
SCALE 1:20

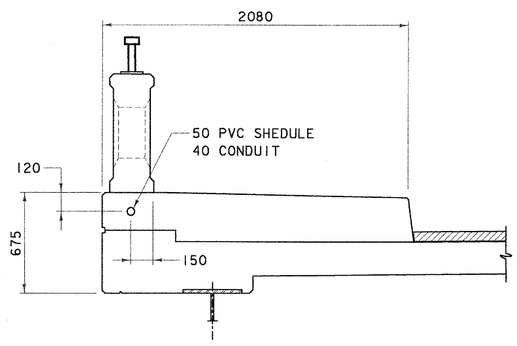

SECTION A-A
SCALE 1:20

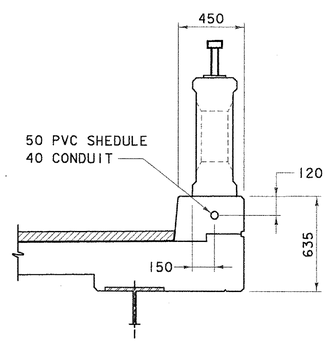

SECTION B-B
SCALE 1:20

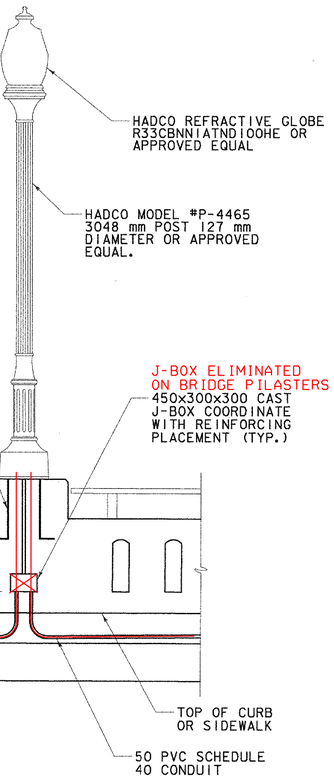

DETAIL A
SCALE 1:50

STATE OF VERMONT
AGENCY OF TRANSPORTATION

Town Of TUNBRIDGE	Bridge No. 4
Highway No. VT.110	Log Sta. / Surv. Sta.
VT.110 OVER THE FIRST BRANCH OF WHITE RIVER	
LIGHTING PLAN AND DETAILS	
Designed By JH	Drawn By MWS
Checked By RMR Date 3/03	Bridge Design Supervisor LMM Date 3/03
PROJECT TUNBRIDGE	PROJECT NO. BRS 0169(6)
I.G.C. Info.	
Bridge Sheet No.	Sheet 84 of 128

Metric

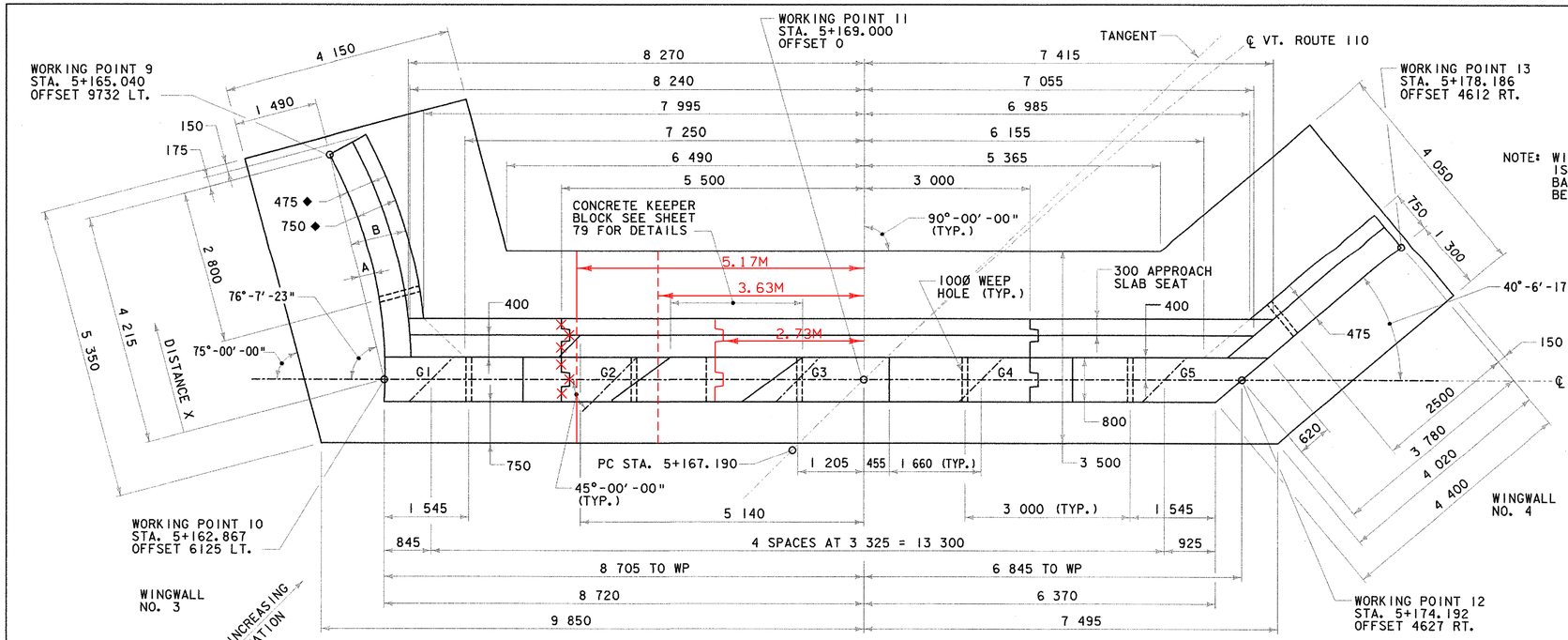

ABUTMENT NO. 2 PLAN VIEW (EXPANSION)

SCALE 1:50

◆ RADIAL DIMENSION

NOTE: WINGWALL NO. 4 GEOMETRY IS STRAIGHT (NOT CURVED), BASED ON A CHORD DRAWN BETWEEN THE WORKING POINTS.

DISTANCE X	A	B
1000	197	953
1500	249	1001
2000	270	1020
2500	262	1013
3000	223	977
3500	154	913
4000	53	821
4215	0	773

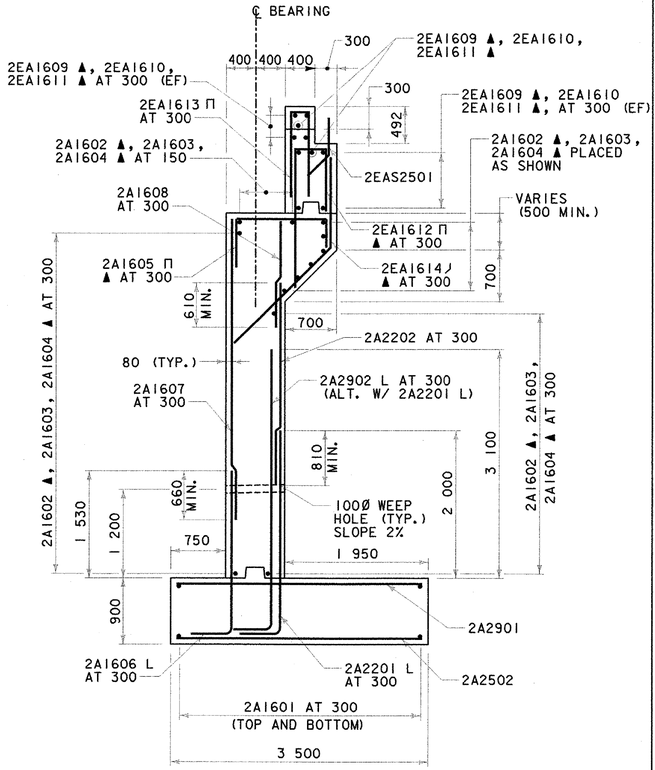

ABUTMENT NO. 2 TYPICAL SECTION (EXPANSION)

SCALE 1:40

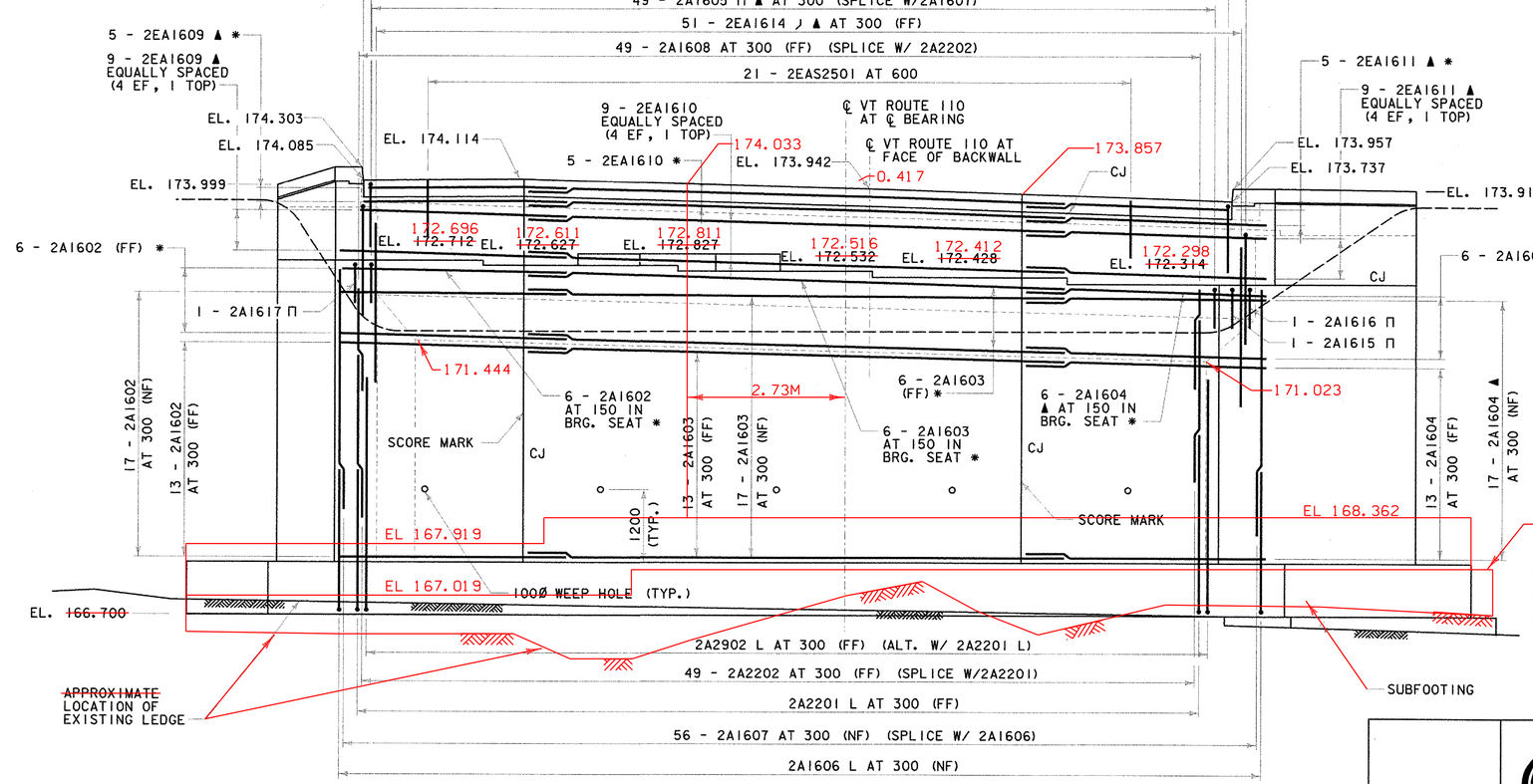

ABUTMENT NO. 2 ELEVATION (EXPANSION)

SCALE 1:50

NOTE

NF = NEAR FACE
FF = FAR FACE
EF = EACH FACE
▲ = FIELD CUT
CJ = CONSTRUCTION JOINT
* = SEE TYPICAL SECTION FOR LAYOUT

STATE OF VERMONT
AGENCY OF TRANSPORTATION

Town Of TUNBRIDGE	Bridge No. 4
Highway No. VT. 110	Log Sta. / Surv. Sta.
VT. 110 OVER THE FIRST BRANCH OF WHITE RIVER	
ABUTMENT NO. 2 DETAILS	
Designed By JH	Drawn By MWS
Checked By RMR Date 3/03	Bridge Design Supervisor LMM Date 3/03
PROJECT TUNBRIDGE	PROJECT NO. BRS 0169(6)
I.G.C. Info.	
Bridge Sheet No.	Sheet 94 of 128

CONSULTING ENGINEERS Inc.
540 Commercial Street
Manchester, NH 03101
PH:(603) 668-8223
FAX:(603) 668-8802
E-MAIL: CLD@CLDENGINEERS.COM

BRIDGE SEATS LOWERED 16MM TO ACCOMODATE INCREASED BEARING THICKNESS. SEE BEARING SHOP DRAWINGS.

se063abut2.dgn

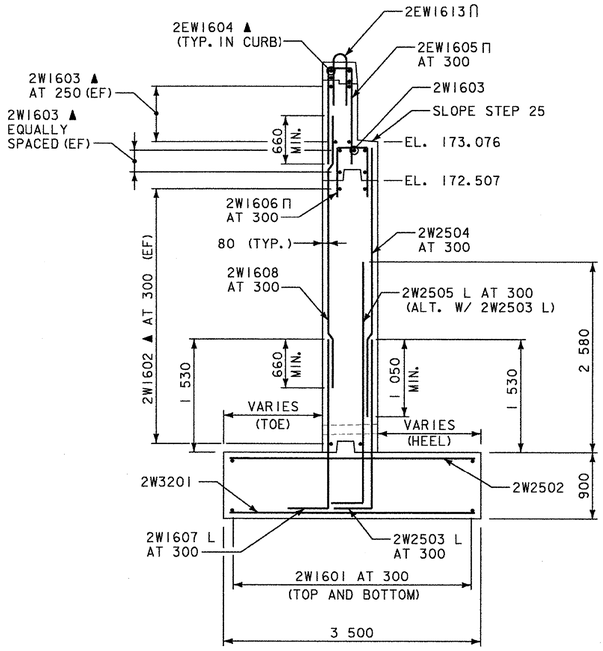

WINGWALL 2 SECTION

SCALE 1:40

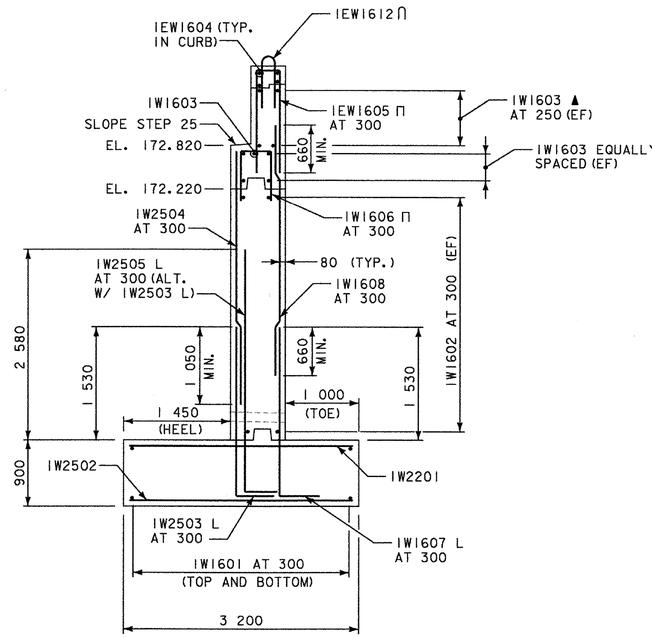

WINGWALL 1 SECTION

SCALE 1:40

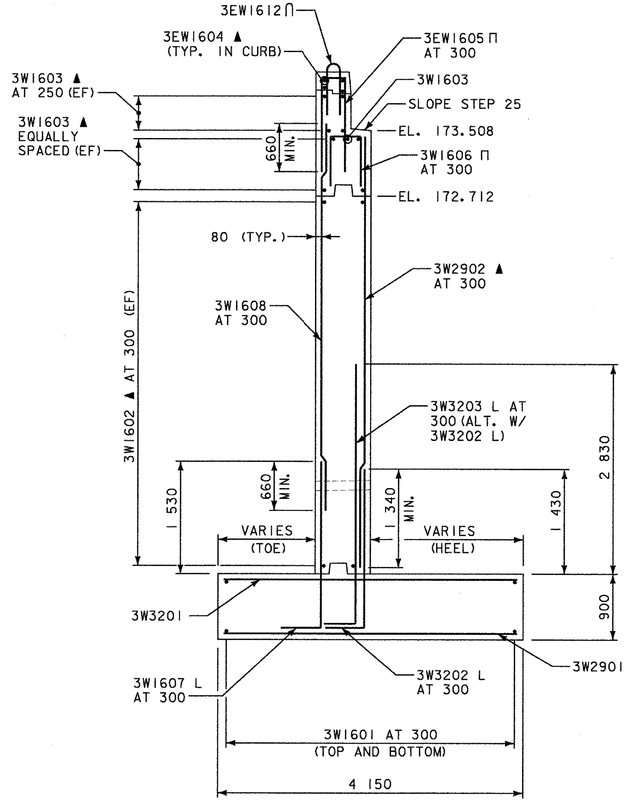

WINGWALL 3 SECTION

SCALE 1:40

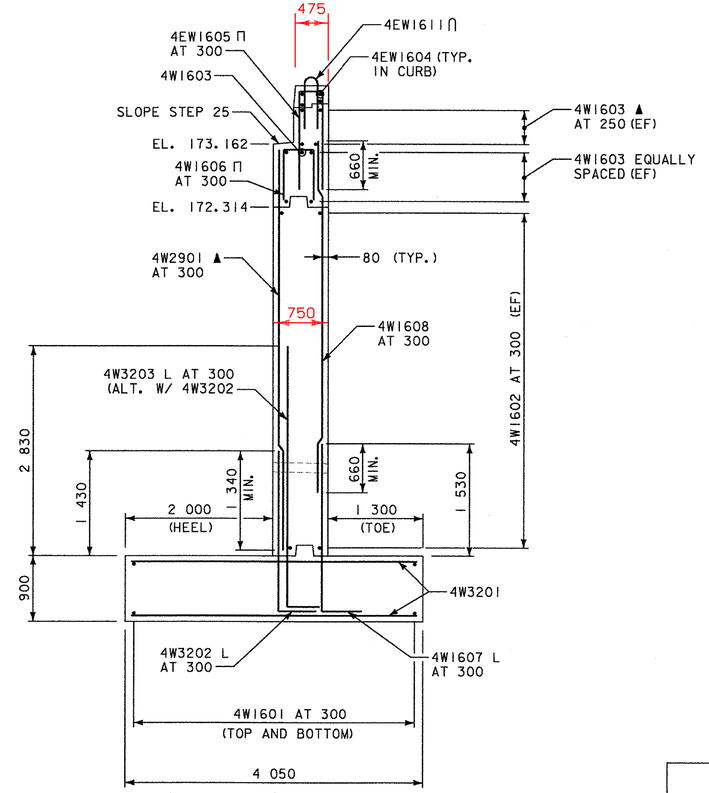

WINGWALL 4 SECTION

SCALE 1:40

NOTE

NF = NEAR FACE
FF = FAR FACE
EF = EACH FACE
▲ = FIELD CUT
CJ = CONSTRUCTION JOINT

CONSULTING ENGINEERS
540 Commercial Street
Manchester, NH 03101
PH:(603) 668-8223
FAX:(603) 669-8802
E-MAIL: CLD@CLDENGINEERS.COM

STATE OF VERMONT
AGENCY OF TRANSPORTATION

Town Of TUNBRIDGE	Bridge No. 4
Highway No. VT.110	Log Sta. / Surv. Sta.
VT.110 OVER THE FIRST BRANCH OF WHITE RIVER	
WINGWALL SECTIONS	
Designed By JH	Drawn By MWS
Checked By RMR Date 3/03	Bridge Design Supervisor LMM Date 3/03
PROJECT TUNBRIDGE	PROJECT NO. BRS 0169(6)
I.G.C. Info.	
Bridge Sheet No.	Sheet 96 of 128

se063WWS.dgn

Metric

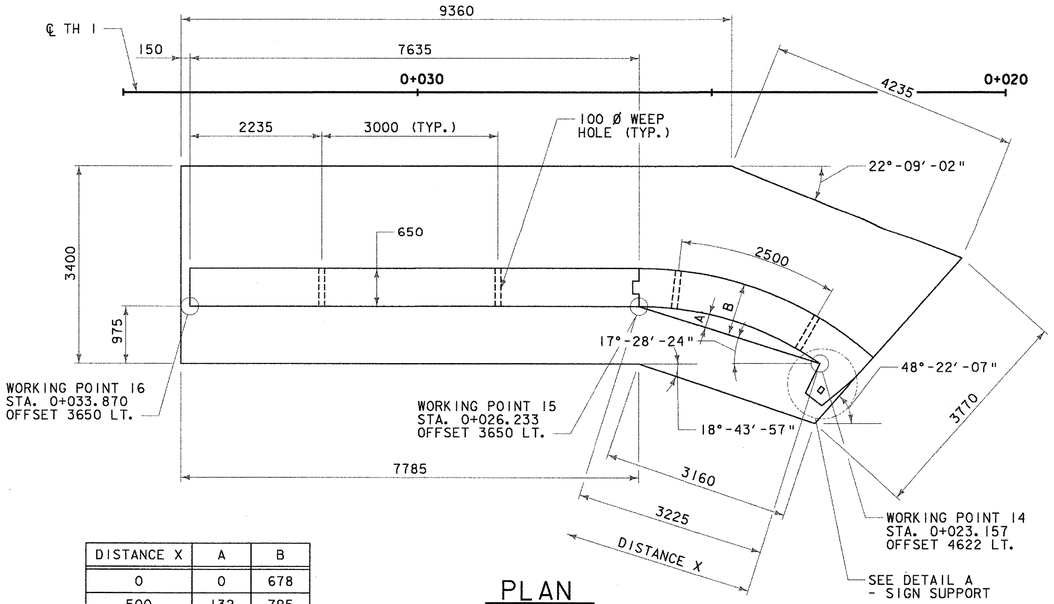

DISTANCE X	A	B
0	0	678
500	132	795
1000	214	867
1500	248	898
2000	235	886
2500	175	833
3000	66	736
3225	0	678

PLAN
SCALE 1:50

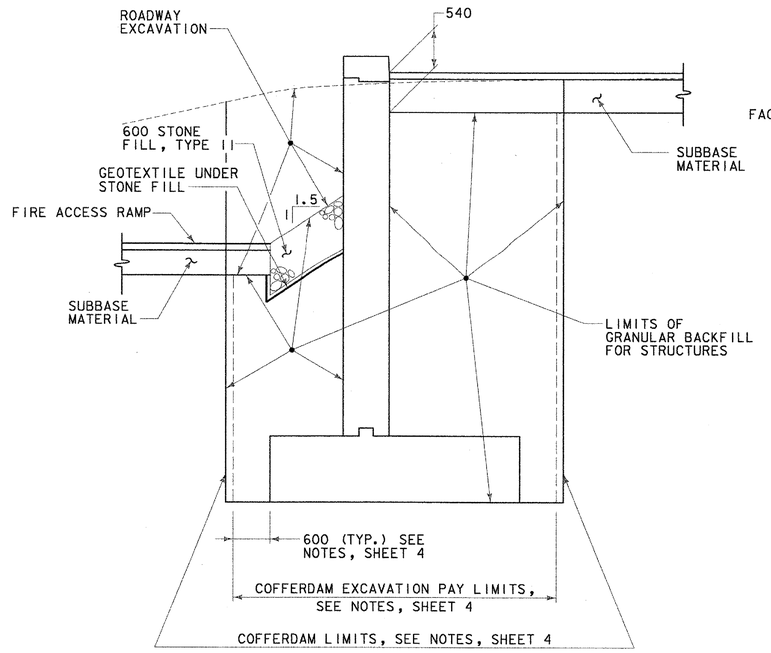

TYPICAL EARTHWORK SECTION TH 1 RETAINING WALL
SCALE 1:40

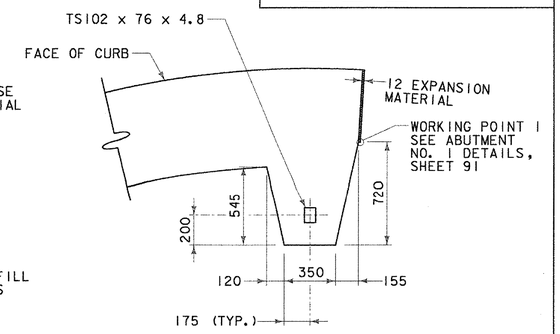

DETAIL A - SIGN SUPPORT
SCALE 1:20

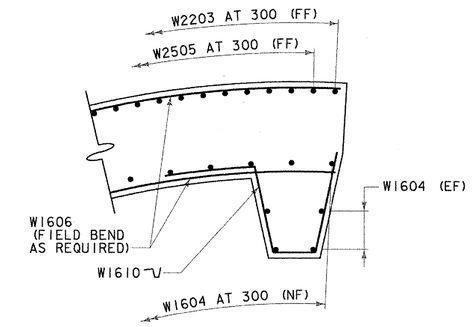

SECTION B-B
SCALE 1:20

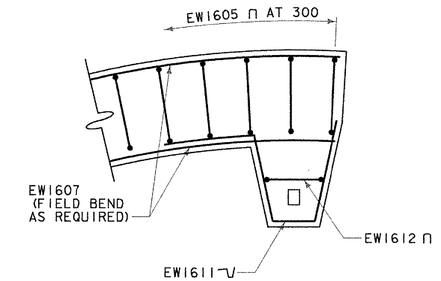

SECTION C-C
SCALE 1:20

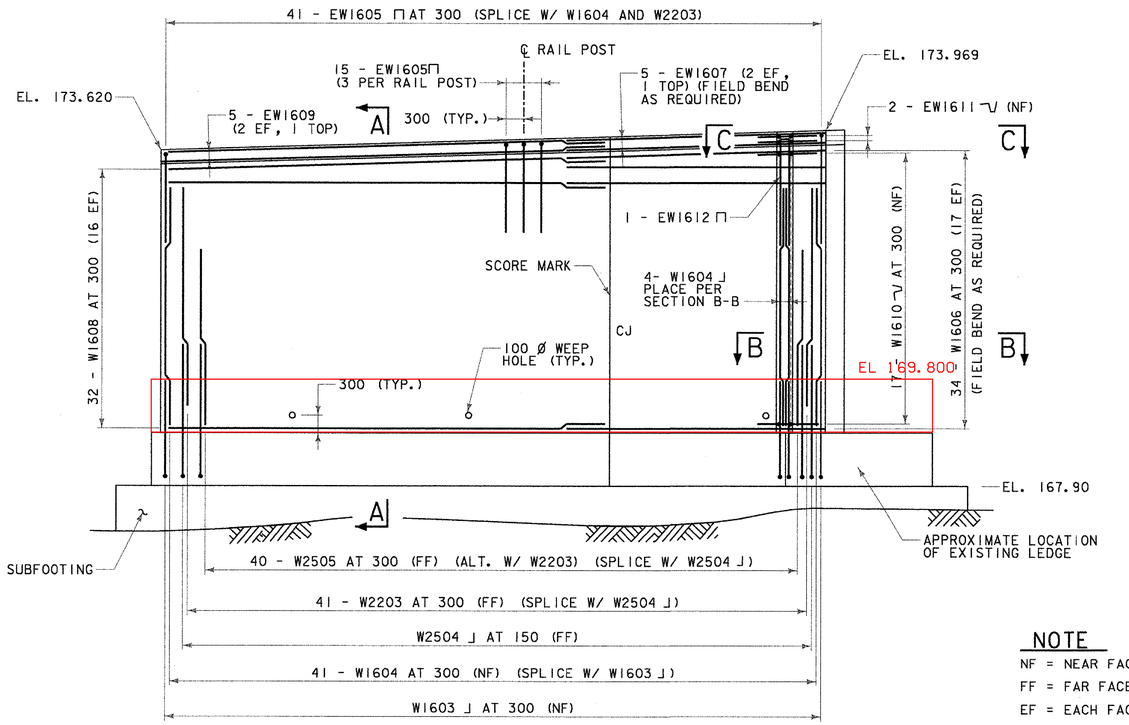

ELEVATION
SCALE 1:50

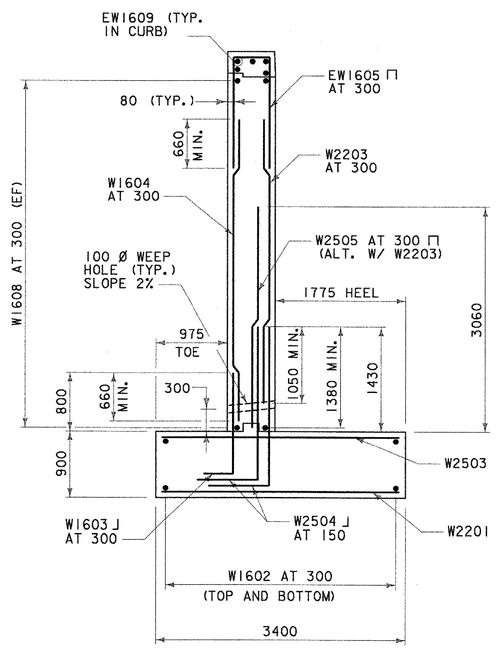

SECTION A-A
SCALE 1:40

NOTE
NF = NEAR FACE
FF = FAR FACE
EF = EACH FACE
▲ = FIELD CUT
CJ = CONSTRUCTION JOINT
* = SEE TYPICAL SECTION FOR LAYOUT

CONSULTING ENGINEERS
E-MAIL CLD@CLDENGINEERS.COM
540 Commercial Street
Manchester, NH 03101
PH:(603) 668-8223
FAX:(603) 668-8802

STATE OF VERMONT
AGENCY OF TRANSPORTATION

Town Of TUNBRIDGE	Bridge No. 4
Highway No. VT. 110	Log Sta. / Surv. Sta.
VT. 110 OVER THE FIRST BRANCH OF WHITE RIVER	
TH 1 RETAINING WALL DETAILS	
Designed By JH	Drawn By MWS
Checked By RMR Date 3/03	Bridge Design Supervisor LMM Date 3/03
PROJECT TUNBRIDGE	PROJECT NO. BRS 0169(6)
I.G.C. Info.	
Bridge Sheet No.	Sheet 99 of 128

se0063mse. dgn

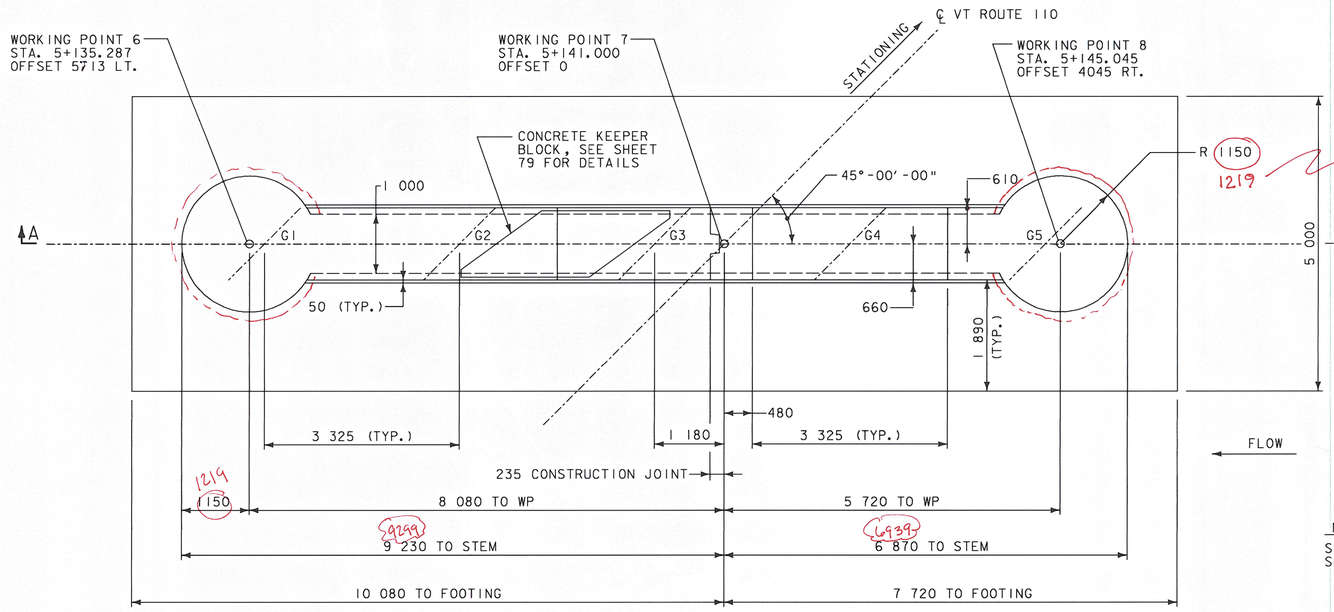

PIER PLAN

SCALE 1:50

change requested by Beck & Bellucci for ease of forming
okay MEM

NOTE

SEE SHEET 101 FOR SECTION A-A.

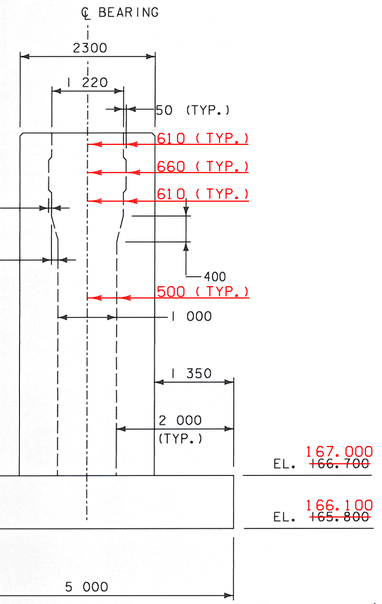

error pointed out by D. Poreer 11/28/2005

PIER SIDE VIEW

SCALE 1:50

Copies sent to Danny Poreer on 10/28/05

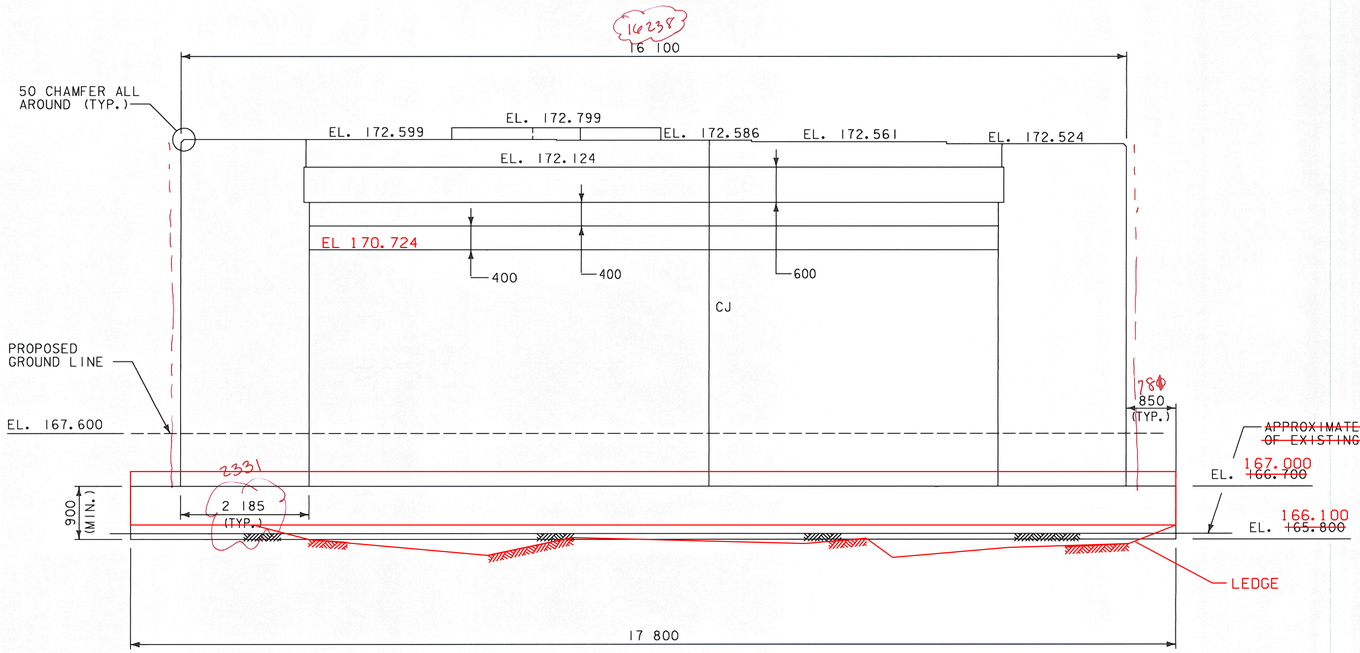

PIER ELEVATION

SCALE 1:50

STATE OF VERMONT
AGENCY OF TRANSPORTATION

Town Of TUNBRIDGE	Bridge No. 4
Highway No. VT.110	Log Sta. / Surv. Sta.
VT.110 OVER THE FIRST BRANCH OF WHITE RIVER	
PIER PLAN AND ELEVATION	
Designed By JH	Drawn By MWS
Checked By BTW Date 3/03	Bridge Design Supervisor LMM Date 3/03
PROJECT TUNBRIDGE	PROJECT NO. BRS 0169(6)
I.G.C. Info.	
Bridge Sheet No.	Sheet 100 of 128

CLD CONSULTING ENGINEERS Inc.
540 Commercial Street
Manchester, NH 03101
PH:(603) 668-8223
FAX:(603) 668-8802
E-MAIL: CLD@CLDENGINEERS.COM

se063pier.dgn

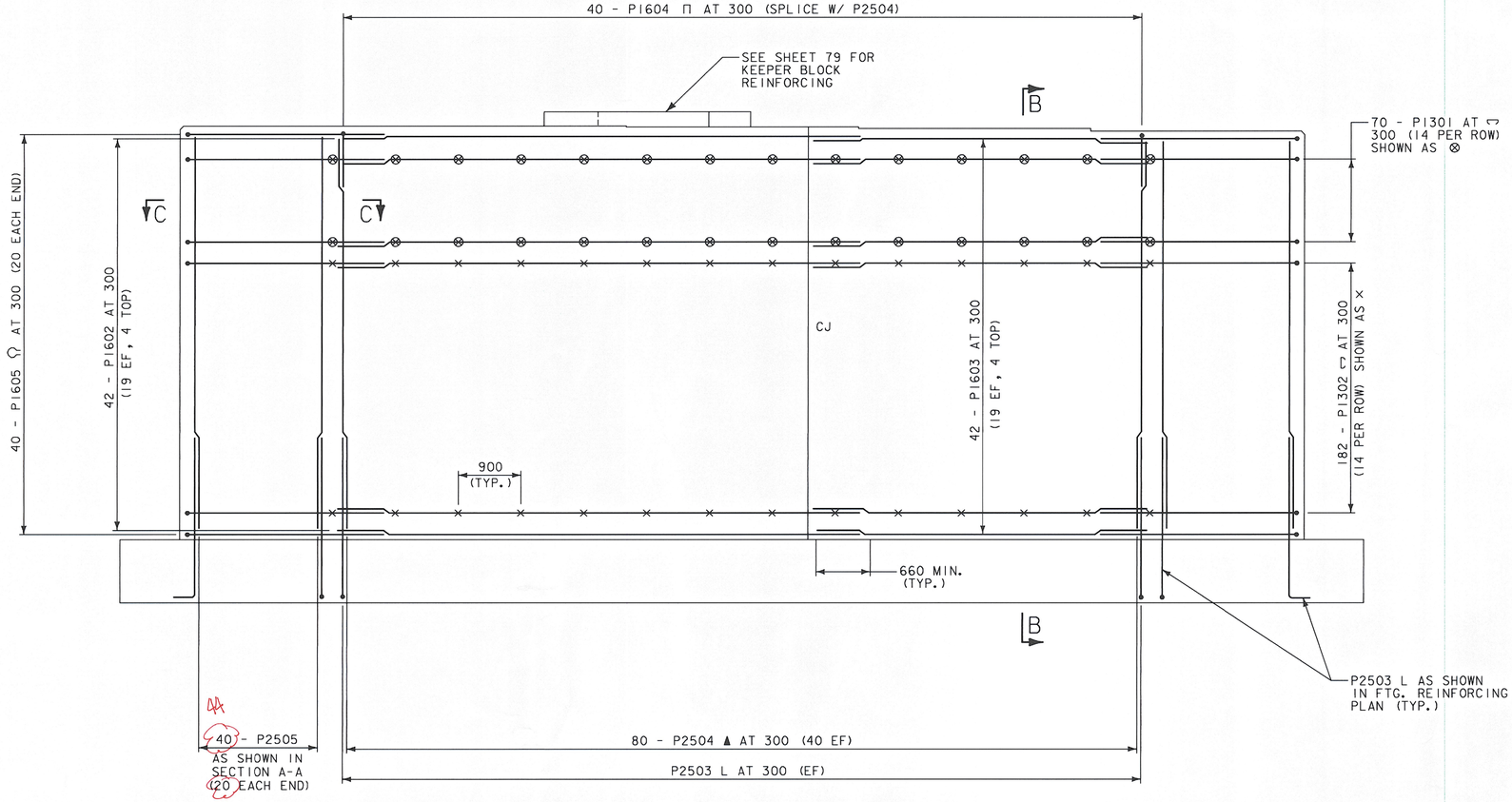

SECTION A-A
SCALE 1:40

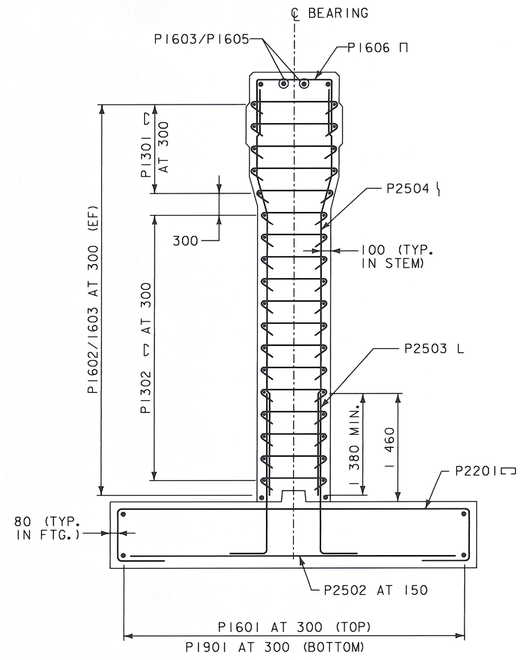

SECTION B-B
SCALE 1:40

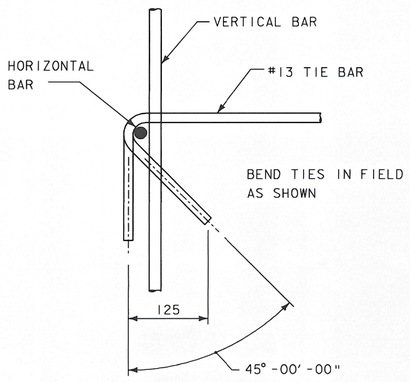

TYPICAL TIE BAR DETAIL
SCALE 1:5

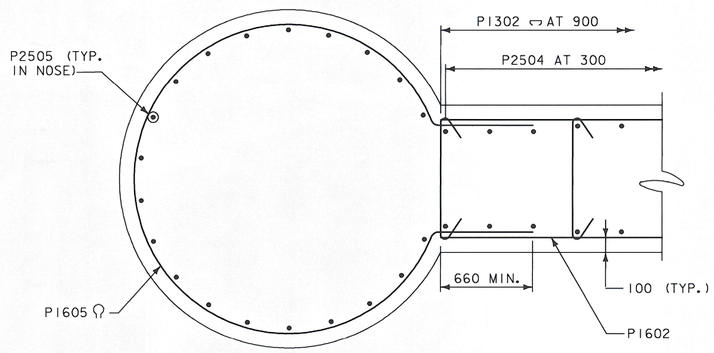

SECTION C-C
SCALE 1:20

NOTE
NF = NEAR FACE
FF = FAR FACE
EF = EACH FACE
CJ = CONSTRUCTION JOINT
▲ = FIELD CUT
⊗ = LATERAL TIE
× = LATERAL TIE

CLD CONSULTING ENGINEERS Inc.
540 Commercial Street
Manchester, NH 03101
PH:(603) 668-8223
FAX:(603) 668-8802
E-MAIL: CLD@CLDENGINEERS.COM

STATE OF VERMONT
AGENCY OF TRANSPORTATION

Town Of	TUNBRIDGE	Bridge No.	4
Highway No.	VT.110	Log Sta. / Surv. Sta.	
VT.110 OVER THE FIRST BRANCH OF WHITE RIVER			
PIER DETAILS			
Designed By	JH	Drawn By	MWS
Checked By	BTW Date 3/03	Bridge Design Supervisor	LMM Date 3/03
PROJECT	TUNBRIDGE	PROJECT NO.	BRS 0169(6)
I.G.C. Info.			
Bridge Sheet No.		Sheet 101 of 128	

se063pier.dgn

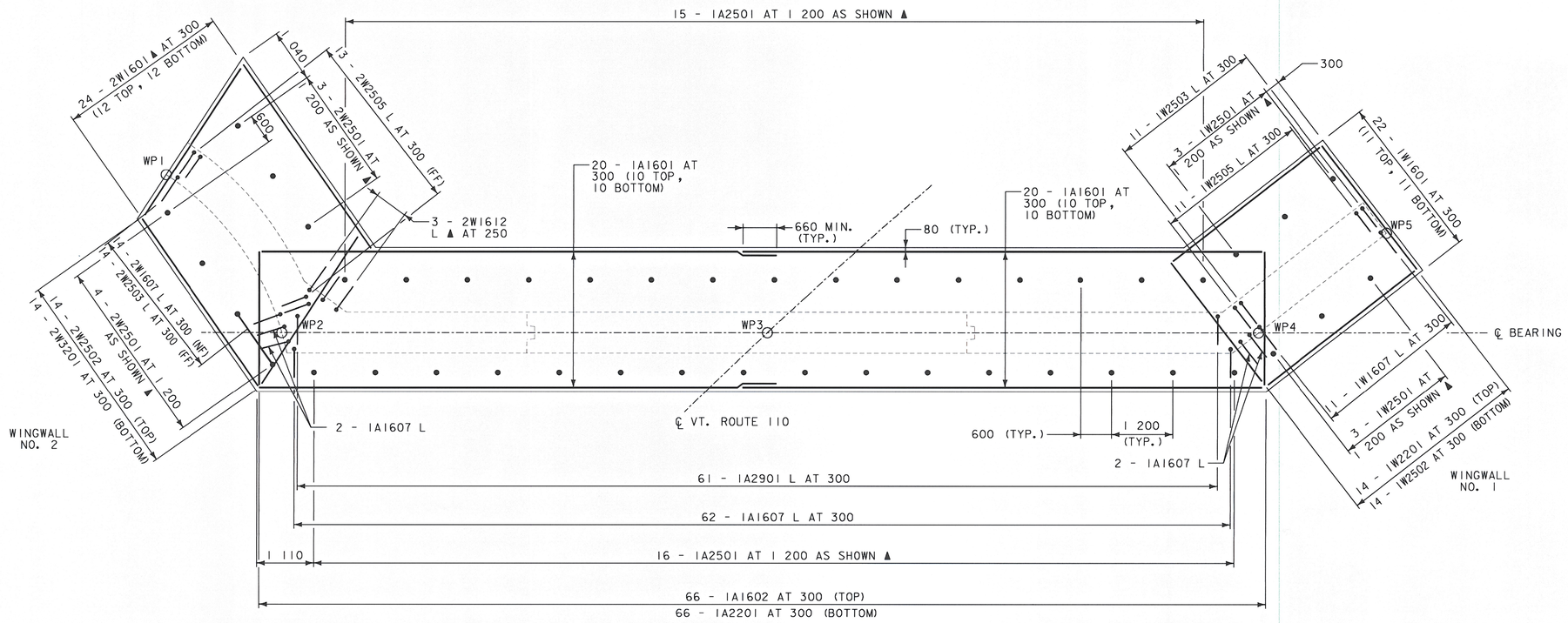

REINFORCING LAYOUT ABUTMENT NO. 1

SCALE 1:50

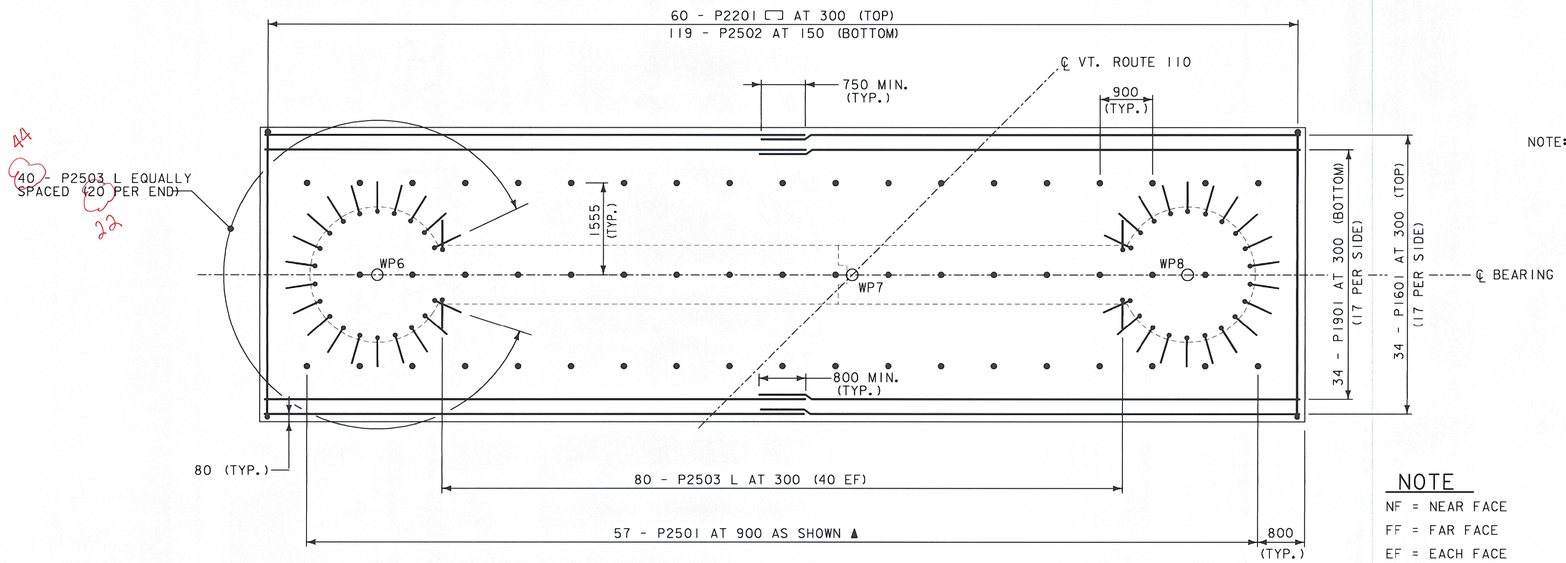

REINFORCING LAYOUT PIER

SCALE 1:50

NOTE: SEE SHEET 103 FOR DOWEL DETAIL

NOTE

NF = NEAR FACE
FF = FAR FACE
EF = EACH FACE
▲ = FIELD CUT
CJ = CONSTRUCTION JOINT

STATE OF VERMONT
AGENCY OF TRANSPORTATION

Town Of TUNBRIDGE	Bridge No. 4
Highway No. VT. 110	Log Sta. / Surv. Sta.
VT. 110 OVER THE FIRST BRANCH OF WHITE RIVER	
FOOTING REINFORCING PLAN (1 OF 2)	
Designed By JH	Drawn By MWS
Checked By RMR Date 3/03	Bridge Design Supervisor LMM Date 3/03
PROJECT TUNBRIDGE	PROJECT NO. BRS 0169(6)
I.G.C. Info.	
Bridge Sheet No.	Sheet 102 of 128

CONSULTING ENGINEERS Inc.
540 Commercial Street
Manchester, NH 03101
PH:(603) 668-8223
FAX:(603) 668-8802
E-MAIL: CLDeCLDENGINEERS.COM

se063Foot.dgn

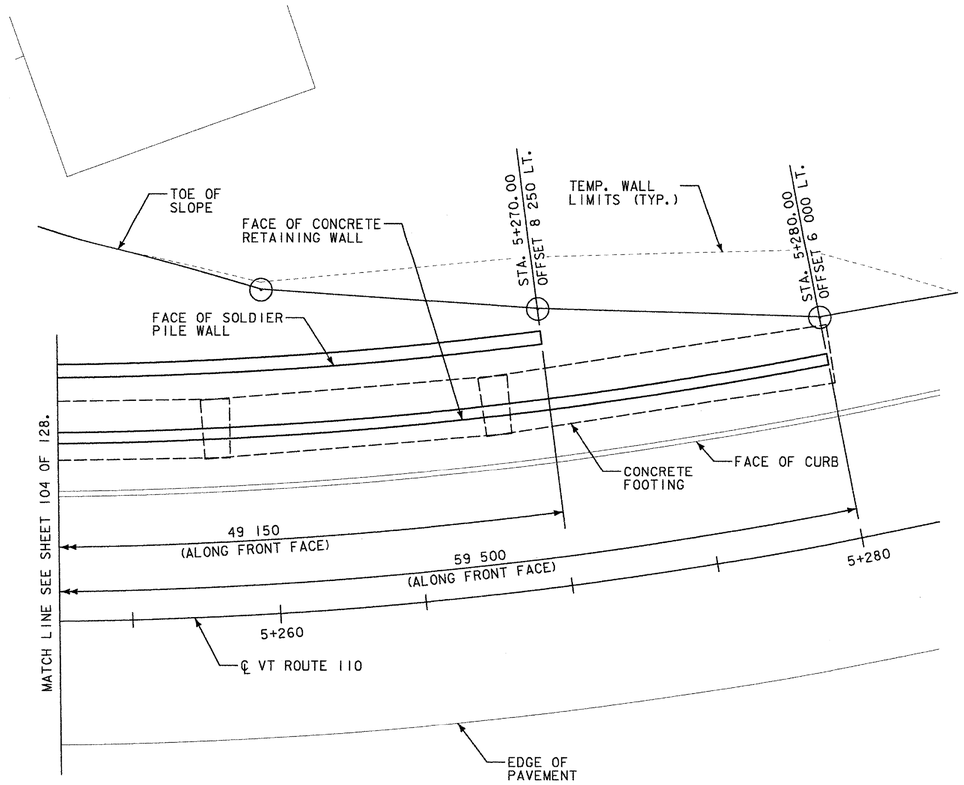

PLAN - CONCRETE RETAINING WALL AND SOLDIER PILE WALL

SCALE 1:100

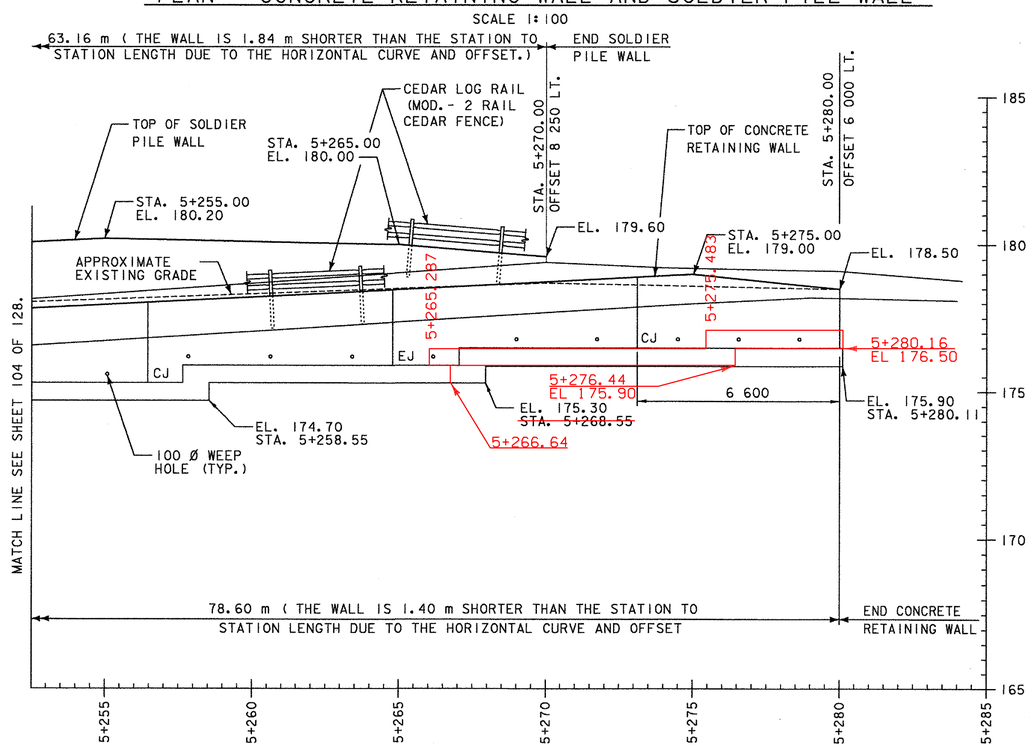

ELEVATION - CONCRETE RETAINING WALL AND SOLDIER PILE WALL

SCALE 1:100

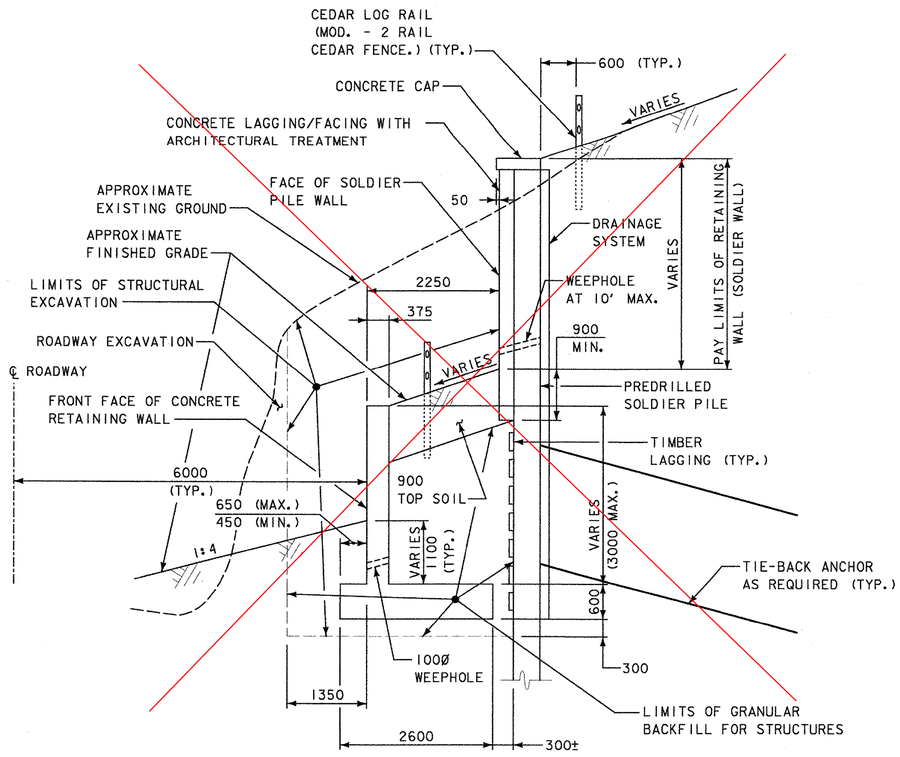

TYPICAL SECTION - CONCRETE/SOLDIER PILE RETAINING WALL

SCALE 1:50

NOTE: THE CONCRETE RETAINING WALL FACE SHALL HAVE THE SAME ARCHITECTURAL TREATMENT AS THE SOLDIER PILE WALL.

SEE SHEET 7 OF 128 FOR DETAIL OF CEDAR LOG RAIL (MOD. - 2 RAIL CEDAR FENCE).

CONCRETE/SOLDIER PILE RETAINING WALL ELIMINATED AND REPLACED WITH CANTILEVERED RETAINING WALL. VALUE ENGINEERING CHANGE OF DESIGN/SUPPLEMENTAL AGREEMENT #4 DATED 05/24/06.

STATE OF VERMONT
AGENCY OF TRANSPORTATION

Town Of TUNBRIDGE	Bridge No. 4
Highway No. VT.110	Log Sta. / Surv. Sta.
VT.110 OVER THE FIRST BRANCH OF WHITE RIVER	
RETAINING WALL PLAN AND ELEVATION (2 OF 2)	
Designed By SRP	Drawn By MWS
Checked By BTW Date 3/03	Bridge Design Supervisor LMM Date 3/03
PROJECT TUNBRIDGE	PROJECT NO. BRS 0169(6)
I.G.C. Info.	
Bridge Sheet No.	Sheet 105 of 128

CONSULTING ENGINEERS Inc.
540 Commercial Street
Manchester, NH 03101
PH: (603) 668-8223
FAX: (603) 668-8802

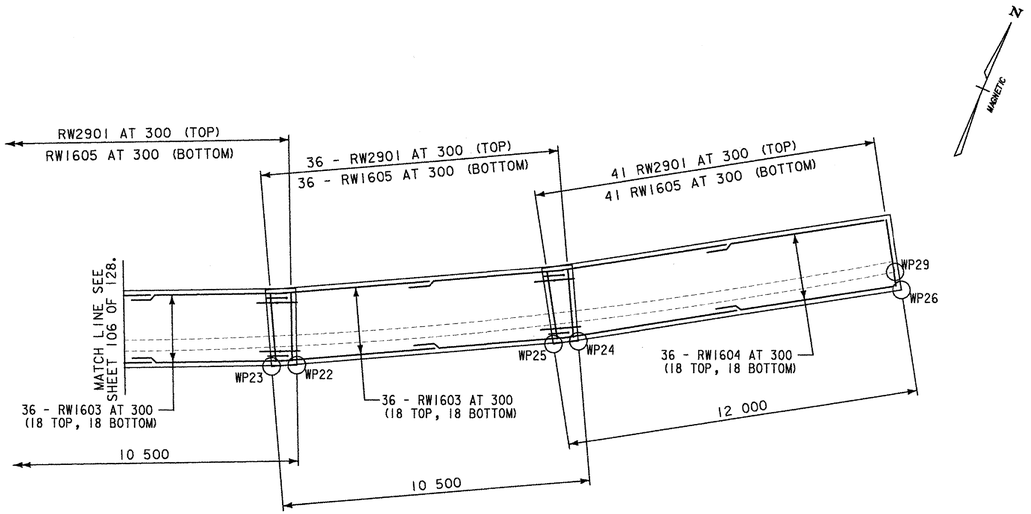

REINFORCING - CONCRETE
CANTILEVER RETAINING WALL FOOTING

SCALE 1:100

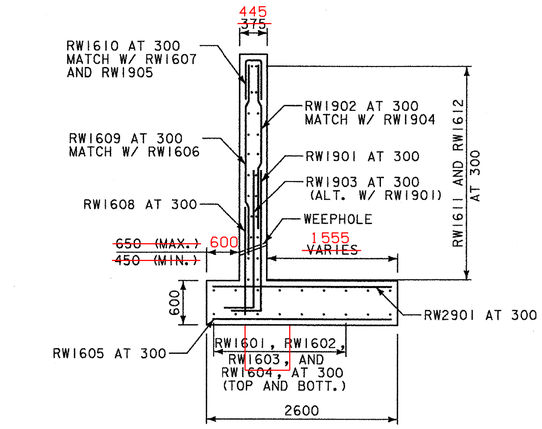

TYPICAL SECTION - RETAINING WALL

SCALE 1:40

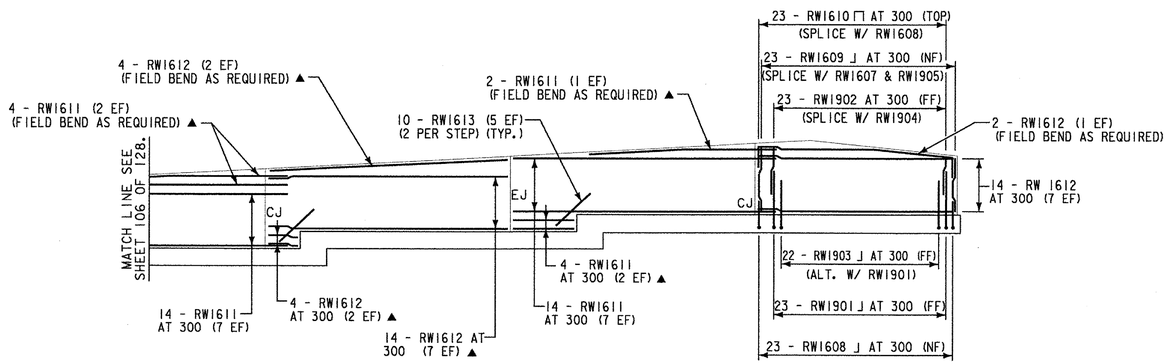

REINFORCING - CONCRETE
CANTILEVER RETAINING WALL

SCALE 1:100

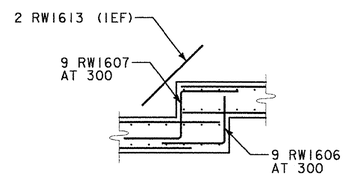

TYPICAL FOOTING STEP DETAIL

SCALE 1:40

NOTE

NF = NEAR FACE
FF = FAR FACE
EF = EACH FACE
▲ = FIELD CUT
CJ = CONSTRUCTION JOINT
EJ = EXPANSION JOINT

CONSULTING ENGINEERS
540 Commercial Street
Manchester, NH 03101
PH:(603) 668-8223
FAX:(603) 668-8802
Inc.

STATE OF VERMONT
AGENCY OF TRANSPORTATION

Town Of TUNBRIDGE	Bridge No. 4
Highway No. VT.110	Log Sta. / Surv. Sta.
VT.110 OVER THE FIRST BRANCH OF WHITE RIVER	
RETAINING WALL REINFORCING DETAILS (2 OF 2)	
Designed By SRP	Drawn By MWS
Checked By BTW Date 3/03	Bridge Design Supervisor LMM Date 3/03
PROJECT TUNBRIDGE	PROJECT NO. BRS 0169(6)
I.G.C. Info.	
Bridge Sheet No.	Sheet 107 of 128

ITEM	NO. PIECES	SIZE	LENGTH	MARK	TYPE	A	B	C	D	E	F	G	H	J	K	R	O
			DECK														
5	618	16	10100	ES1601	-												
6	909	16	10725	ES1602	-	▲	*										
7	12	16	10125	ES1603	-	▲											
8	8	16	8175	ES1604	-	▲											
9	12	16	3900	ES1605	-												
10	15	16	3200	ES1606	-												
11	188	16	1575	ES1607	S5	250	425	300	350			250					
12	10	16	1525	ES1608	S5	250	425	250	350			250					
13	177	16	3175	ES1609	S5	250	425	1900	350			250	▲				
14	6	16	1950	ES1610	17		250	425	1275	▲							
15	6	16	1875	ES1611	8	1275	350	▲				250					
16	1	16	2725	ES1612	S5	250	400	1500	325			250					
17	1	16	2675	ES1613	S5	250	375	1500	300			250					
18	1	16	2625	ES1614	S5	250	350	1500	275			250					
19	1	16	2575	ES1615	S5	250	325	1500	250			250					
20	1	16	2525	ES1616	S5	250	300	1500	225			250					
21	1	16	2475	ES1617	S5	250	275	1500	200			250					
22	1	16	2425	ES1618	S5	250	250	1500	175			250					
23	20	16	2500	ES1619	4	0	610	270	740	270	610	0	250				2160
24	30	16	2000	ES1620	S5	150	425	550	425			450					
25	32	16	2650	ES1621	S5	650	285	780	285			650					
26	32	16	1900	ES1622	S5	1005	285	355	255			0					
27	703	16	1825	ES1623	S5	0	625	175	625			400					
28	40	16	2100	ES1624	S5	0	625	450	625			400					
29	97	19	7100	ES1901	-	*											
30	29	22	3825	ES2201	-												
31	24	22	4125	ES2202	-	*											
			APPROACH SLAB NO. 1														
39	53	16	6950	1EAS1601	-	*											
40	21	25	900	1EAS2501	19		400	500	0				212		212		
41	59	29	8075	1EAS2901	1	400	7675	▲				0		250			
			APPROACH SLAB NO. 2														
49	53	16	6825	2EAS1601	-	*											
50	21	25	900	2EAS2501	19		400	500	0				212		212		
51	57	29	7925	2EAS2901	1	400	7525	▲				0		250			
			ABUTMENT NO. 1														
59	40	16	10125	1A1601	-												
60	66	16	2625	1A1602	-	*											
61	33	16	5550	1A1603	-	▲											
62	33	16	9275	1A1604	-												
63	33	16	5850	1A1605	-	▲											
64	61	16	2475	1A1606	17	▲	660	1240	575	*							
65	66	16	2900	1A1607	17		550	2350	0								
66	66	16	2750	1A1608	-												
67	61	16	2150	1A1609	-												
68	9	16	5550	1EA1610	-												
69	9	16	9275	1EA1611	-												
70	9	16	5850	1EA1612	-												
71	64	16	2825	1EA1613	17	▲	1720	440	665								
72	62	16	1750	1EA1614	17		805	140	805								
73	63	16	2900	1EA1615	19	▲	1725	1175	0				1220		1220		2395
74	1	16	2175	1A1616	17		660	1040	475								
75	1	16	1950	1A1617	17		660	815	475								
76	1	16	2125	1A1618	17		660	805	660								
77	66	22	2625	1A2201	-												
78	6	25	9000	1A2501	-	▲	*										
79	61	29	3525	1A2901	17		550	2975	0								

ITEM	NO. PIECES	SIZE	LENGTH	MARK	TYPE	A	B	C	D	E	F	G	H	J	K	R	O
			WINGWALL NO. 1														
105	22	16	3725	1W1601	-												
106	24	16	3625	1W1602	-												
107	15	16	2950	1W1603	-	▲											
108	4	16	2450	1EW1604	-												
109	9	16	3075	1EW1605	17		1380	315	1380								
110	10	16	1950	1W1606	17		680	590	680								
111	11	16	2900	1W1607	17		550	2350	0								
112	11	16	3450	1W1608	-												
113	3	16	1750	1W1609	23		660	430	660				404		522		
114	30	16	3000	1W1610	19		1500	1500	0				918		1186		2686
115	12	16	1325	1W1611	19		660	665	0				404		522		1187
116	14	16	1525	1EW1612	S11								700				225
117	15	22	3025	1W2201	-	*											
118	1	25	9000	1W2501	-	▲											
119	14	25	3025	1W2502	-												
120	11	25	2900	1W2503	17		550	2350	0								
121	11	25	3475	1W2504	-												
122	11	25	3950	1W2505	17		550	3400	0								
			WINGWALL NO. 2														
130	24	16	4450	2W1601	-												
131	26	16	4900	2W1602	-	▲											
132	15	16	4075	2W1603	-	▲											
133	4	16	3475	2EW1604	-	▲											
134	13	16	2900	2EW1605	17		1305	290	1305								
135	13	16	1950	2W1606	17		680	590	680								
136	14	16	2900	2W1607	17		550	2350	0								
137	14	16	3725	2W1608	-												
138	9	16	4825	2W1609	14	0	665	3500	660	0			389				
139	13	16	1325	2W1610	19		660	665	0				633		188		853
140	3	16	1725	2W1611	23		660	405	660				624		215		
141	3	16	4650	2W1612	17	▲	550	4100	0								
142	19	16	1525	2EW1613	S11								700				225
143	1	25	9000	2W2501	-	▲											
144	14	25	3600	2W2502	-												
145	14	25	2900	2W2503	17		550	2350	0								
146	14	25	3725	2W2504	-												
147	13	25	3950	2W2505	17		550	3400	0								
148	15	32	3600	2W3201	-	*											
			ABUTMENT NO. 2														
156	48	16	8925	2A1601	-												
157	42	16	3875	2A1602	-												
158	42	16	9175	2A1603	-												
159	42	16	4100	2A1604	-	▲											
160	49	16	2650	2A1605	17	▲	660	1340	650								
161	56	16	2900	2A1606	17		550	2350	0								
162	56	16	4175	2A1607	-												
163	49	16	1700	2A1608	-												
164	14	16	3875	2EA1609	-	▲											
165	14	16	9175	2EA1610	-												
166	14	16	4100	2EA1611	-	▲											
167	52	16	3325	2EA1612	17	▲	2000	540	785								
168	50	16	2500	2EA1613	17		1130	240	1130								
169	51	16	3075	2EA1614	19	▲	1850	1225	0	*			1308		1308		2533
170	1	16	2250	2A1615	17		660	1115	475								
171	1	16	2000	2A1616	17		660	865	475								
172	1	16	2125	2A1617	17		660	805	660								
173	6	16	2325	2A1618	17		625	1075	625								
174	4	16	3375	2A1619	17		625	2125	625								
175	49	22	3375	2A2201	17		550	2825	0								
176	49	22	2775	2A2202	-	*											
177	3	25	9000	2A2501	-	▲											
178	58	25	3325	2A2502	-												
179	59	29	3325	2A2901	-	*											
180	49	29	4475	2A2902	17		550	3925	0								

NOTES

1. UNLESS OTHERWISE DESIGNATED, ALL BAR REINFORCEMENT FOR CONCRETE IN SIZES UP TO AND INCLUDING NO. 18 SHALL CONFORM TO THE REQUIREMENTS OF THE "SPECIFICATIONS FOR DEFORMED BILLET-STEEL BARS FOR CONCRETE REINFORCEMENT", AASHTO M 31(ASTM A 615-SI). ALL BARS SHALL BE GRADE 60, UNLESS OTHERWISE DESIGNATED.
2. FOR TYPICAL BENDING DETAILS, RECOMMENDED PIN DIAMETER "D" OF BENDS AND HOOKS, AND OTHER STANDARD PRACTICE, SEE CURRENT CONCRETE REINFORCING STEEL INSTITUTE "MANUAL OF STANDARD PRACTICE".
3. BARS WHICH REQUIRE MORE ACCURATE BENDING THAN STANDARD PRACTICES SHOULD HAVE LIMITS INDICATED.
4. ALL DIMENSIONS ARE OUT TO OUT OF BAR EXCEPT "A" AND "G" ON STANDARD 180 DEGREE AND 135 DEGREE HOOKS.
5. "J" DIMENSION ON 180 DEGREE HOOKS TO BE SHOWN ONLY WHERE NECESSARY TO RESTRICT HOOK SIZE. OTHERWISE, STANDARD HOOKS ARE TO BE USED.
6. "H" DIMENSION ON STIRRUPS TO BE SHOWN ONLY WHEN NECESSARY TO MAINTAIN CLEARANCES.
7. WHERE SLOPE DIFFERS FROM 45 DEGREES, DIMENSIONS "H" AND "K" MUST BE SHOWN.
8. ▲ DENOTES BARS TO BE CUT IN FIELD.
9. * DENOTES ONE EXTRA BAR ADDED FOR TESTING PURPOSES.
10. △ DENOTES TWO EXTRA BARS ADDED FOR TESTING PURPOSES.
11. "E" IN PREFIX DENOTES EPOXY COATED REINFORCING STEEL.

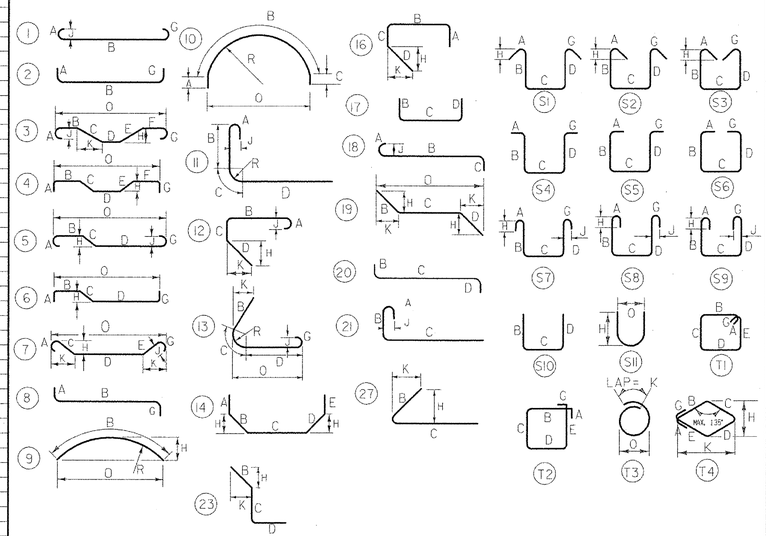

ASTM STANDARD REINFORCING BARS

BAR SIZE DESIGNATION	NOMINAL (kg/m)	NOMINAL DIMENSIONS ROUND SECTION DIAMETER (MM)	CROSS SECTIONAL AREA (MM²)	PERIMETER (MM)
#10	0.560	9.5	71	29.84
#13	.0994	12.7	129	39.90
#16	1.552	15.9	199	49.95
#19	2.235	19.1	284	60.00
#22	3.042	22.2	387	69.74
#25	3.973	25.4	510	79.80
#29	5.060	28.7	645	90.16
#32	6.404	32.3	819	101.47
#36	7.907	35.8	1006	112.47
#43	11.380	43.0	1452	135.09
#57	20.240	57.3	2581	180.01

CONSULTING ENGINEERS
CLD Inc.
540 Commercial Street
Manchester, NH 03101
PH:(603) 668-8223
FAX:(603) 668-8802
E-MAIL: CLD@CLDENGINEERS.COM

STATE OF VERMONT
AGENCY OF TRANSPORTATION

Town Of TUNBRIDGE	Bridge No. 4
Highway No. VT.101	Log Sta.
	Surv. Sta.

VT.110 OVER THE FIRST BRANCH OF WHITE RIVER

REINFORCING SCHEDULE (1 OF 2)

Designed By JH	Drawn By MWS
Checked By RMR Date 3/03	Bridge Design Supervisor LMM Date 3/03
PROJECT	PROJECT NO.
I.G.C. Info.	
Bridge Sheet No.	Sheet 108 of 128

ITEM	NO. PIECES	SIZE	LENGTH	MARK	TYPE	A	B	C	D	E	F	G	H	J	K	R	O
1			WINGWALL NO. 3														
2																	
3																	
4																	
5	28	16	5200	3W1601	-	▲											
6	36	16	4875	3W1602	-	▲											
7	15	16	4075	3W1603	-	▲											
8	4	16	3950	3EW1604	-	▲											
9	13	16	2850	3EW1605	17		1280	290	1280								
10	13	16	1950	3W1606	17		680	590	680								
11	14	16	2900	3W1607	17		550	2350	0								
12	14	16	5125	3W1608	-												
13	13	16	4275	3W1609	14	0	660	2955	660	0			451				
14	23	16	1325	3W1610	19		660	665	0				660		0		660
15	3	16	6075	3W1611	17	▲	550	5525	0								
16	21	16	1525	3EW1612	S11								700				225
17	1	25	9000	3W2501	-	▲											
18	36	29	3975	3W2901	-												
19	14	29	5750	3W2902	-	▲											
20	18	32	3975	3W3201	-												
21	15	32	2800	3W3202	17	*	550	2250	0								
22	14	32	4200	3W3203	17		550	3650	0								
23																	
24																	
25																	
26			WINGWALL NO. 4														
27																	
28																	
29																	
30	28	16	4025	4W1601	-												
31	32	16	4225	4W1602	-												
32	15	16	3500	4W1603	-	▲											
33	4	16	3550	4EW1604	-												
34	11	16	2950	4EW1605	17		1330	290	1330								
35	11	16	1950	4W1606	17		680	590	680								
36	11	16	2900	4W1607	17		550	2350	0								
37	12	16	4750	4W1608	-	*											
38	41	16	2750	4W1609	19		1375	1375	0				886		1052		2427
39	23	16	1325	4W1610	19		660	665	0				425		505		1170
40	18	16	1525	4EW1611	S11								700				225
41	2	25	9000	4W2501	-	▲											
42	13	29	5400	4W2901	-	▲											
43	28	32	3875	4W3201	-												
44	13	32	2800	4W3202	17		550	2250	0								
45	13	32	4200	4W3203	17		550	3650	0								
46																	
47																	
48																	
49			PIER														
50																	
51																	
52																	
53	70	13	1375	P1301	16	175	1025	0	175	*			125		125		
54	182	13	1150	P1302	16	175	800	0	175				125		125		
55	34	16	9200	P1601	-												
56	42	16	7475	P1602	-												
57	42	16	4725	P1603	-												
58	40	16	2425	P1604	17		700	1025	700								
59	40	16	7175 (7620)	P1605	SP	700	5775	700	6220							1050 (1120)	800
60				P1606 - P1607 INTENTIONALLY LEFT BLANK													
61	5	16	3125	P1608	17		525	2075	525								
62	6	16	2675	P1609	17		525	1625	525								
63	34	19	9225	P1901	-												
64	60	22	7600	P2201	S6	640	740	4840	740				640				
65	7	25	9000	P2501	-	▲											
66	119	25	4750	P2502	-												
67	120 (124)	25	2775	P2503	17		0	2275	500								
68	80	25	5675	P2504	6	0	1335	415	3925	▲			0	100			5660
69	40 (44)	25	5700	P2505	-	▲											
70																	
71																	
72																	
73																	
74			BRIDGE RAIL														
75																	
76																	
77																	
78	24	16	10100	ER1601	-												
79	10	16	650	ER1602	-												
80	30	16	1500	ER1603	17		425	650	425								
81	8	16	3925	ER1604	-	▲	●										
82	16	16	1250	ER1605	17	▲	0	1025	225								
83	484	16	2125	ER1606	S6	550	150	700	150				575				
84	40	16	3375	ER1607	S6	725	450	1025	450				725				
85	49	16	2325	ER1608	S6	625	200	750	200				550				
86	8	16	2625	ER1609	S6	750	225	875	225				550				
87	15	16	2925	ER1610	S6	875	250	1000	250				550				
88	40	16	600	ER1611	-												
89	24	22	10100	ER2201	-												
90	9	22	3925	ER2202	-	▲	*										
91																	
92																	
93																	
94																	
95																	
96																	
97																	
98																	
99																	

ITEM	NO. PIECES	SIZE	LENGTH	MARK	TYPE	A	B	C	D	E	F	G	H	J	K	R	O
101			RETAINING WALL														
102																	
103																	
104																	
105	72	16	6500	RW1601	-												
106	36	16	8200	RW1602	-												
107	108	16	5500	RW1603	-												
108	36	16	6250	RW1604	-												
109	284	16	2450	RW1605	-	*											
110	45	16	1725	RW1606	17		675	1050	0								
111	45	16	2400	RW1607	20		675	1050	675								
112	266	16	1925	RW1608	17		400	1525	0								
113	266	16	2650	RW1609	-	▲											
114	266	16	1550	RW1610	17		665	220	665								
115	114	16	8675	RW1611	-	▲											
116	78	16	7850	RW1612	-	▲											
117	10	16	1475	RW1613	-												
118	266	19	2425	RW1901	17		400	2025	0								
119	267	19	2300	RW1902	-	▲	*										
120	257	19	2125	RW1903	17		400	1725	0								
121	284	22	2450	RW2901	-	*											
122																	
123																	
124			CONCRETE RETAINING WALL AT TH 1														
125																	
126																	
127																	
128	26	16	4075	W1601	-												
129	24	16	9200	W1602	-												
130	45	16	2025	W1603	17	*	400	1625	0								
131	45	16	4125	W1604	-												
132	56	16	3475	EW1605	17		1505	465	1505								
133	34	16	5025	W1606	-												
134	5	16	5025	EW1607	-	*											
135	32	16	7475	W1608	-												
136	5	16	7475	EW1609	-												
137	17	16	2025	W1610	3	0	660	590	185	590	0	0	575	0	134		
138	2	16	2025	EW1611	3	0	660	590	185	590	0	0	575	0	134		
139	1	16	3325	EW1612	17		1500	325	1500								
140	31	22	3250	W2201	-	*											
141	13	22	3800	W2202	-	▲											
142	41	22	3875	W2203	-												
143	5	25	9000	W2501	-	▲											
144	13	25	3800	W2502	-	▲											
145	31	25	3250	W2503	-												
146	81	25	3075	W2504	17		825	2250	0								
147	41	25	3025	W2505	-	*											
148																	
149																	
150																	
151																	
152																	
153																	
154																	
155																	
156																	
157																	
158																	
159																	
160																	
161																	
162																	
163																	
164																	
165																	
166																	
167																	
168																	
169																	
170																	
171																	
172																	
173																	
174																	
175																	
176																	
177																	
178																	
179																	
180																	
181																	
182																	
183																	
184																	
185																	
186																	
187																	
188																	
189																	
190																	
191																	
192																	
193																	
194																	
195																	
196																	
197																	
198																	

NOTES

1. UNLESS OTHERWISE DESIGNATED, ALL BAR REINFORCEMENT FOR CONCRETE IN SIZES UP TO AND INCLUDING NO. 18 SHALL CONFORM TO THE REQUIREMENTS OF THE "SPECIFICATIONS FOR DEFORMED BILLET-STEEL BARS FOR CONCRETE REINFORCEMENT", AASHTO M 31 (ASTM A 615-91). ALL BARS SHALL BE GRADE 60, UNLESS OTHERWISE DESIGNATED.
2. FOR TYPICAL BENDING DETAILS, RECOMMENDED PIN DIAMETER "D" OF BENDS AND HOOKS, AND OTHER STANDARD PRACTICE, SEE CURRENT CONCRETE REINFORCING STEEL INSTITUTE "MANUAL OF STANDARD PRACTICE".
3. BARS WHICH REQUIRE MORE ACCURATE BENDING THAN STANDARD PRACTICES SHOULD HAVE LIMITS INDICATED.
4. ALL DIMENSIONS ARE OUT TO OUT OF BAR EXCEPT "A" AND "G" ON STANDARD 180 DEGREE AND 135 DEGREE HOOKS.
5. "J" DIMENSION ON 180 DEGREE HOOKS TO BE SHOWN ONLY WHERE NECESSARY TO RESTRICT HOOK SIZE. OTHERWISE, STANDARD HOOKS ARE TO BE USED.
6. "H" DIMENSION ON STIRRUPS TO BE SHOWN ONLY WHEN NECESSARY TO MAINTAIN CLEARANCES.
7. WHERE SLOPE DIFFERS FROM 45 DEGREES, DIMENSIONS "H" AND "K" MUST BE SHOWN.
8. ▲ DENOTES BARS TO BE CUT IN FIELD.
9. ✳ DENOTES ONE EXTRA BAR ADDED FOR TESTING PURPOSES.
10. △ DENOTES TWO EXTRA BARS ADDED FOR TESTING PURPOSES.
11. "E" IN PREFIX DENOTES EPOXY COATED REINFORCING STEEL.

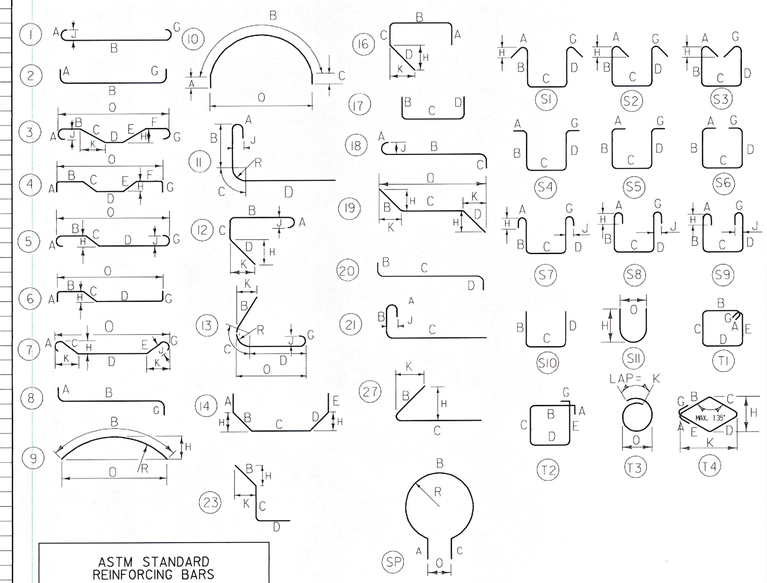

ASTM STANDARD REINFORCING BARS

BAR SIZE DESIGNATION	NOMINAL (Kg/m)	NOMINAL DIMENSIONS ROUND SECTION		
		DIAMETER (MM)	CROSS SECTIONAL AREA (MM^2)	PERIMETER (MM)
#10	0.560	9.5	71	29.84
#13	.0994	12.7	129	39.90
#16	1.552	15.9	199	49.95
#19	2.235	19.1	284	60.00
#22	3.042	22.2	387	69.74
#25	3.973	25.4	510	79.80
#29	5.060	28.7	645	90.16
#32	6.404	32.3	819	101.47
#36	7.907	35.8	1006	112.47
#43	11.380	43.0	1452	135.09
#57	20.240	57.3	2581	180.01

⚠ Revisions 12/22/05 due to change in pier end drometer

CONSULTING ENGINEERS Inc.
540 Commercial Street
Manchester, NH 03101
PH: (603) 668-8223
FAX: (603) 668-8802
E-MAIL: CLD@CLDENGINEERS.COM

STATE OF VERMONT
AGENCY OF TRANSPORTATION

Town Of TUNBRIDGE	Bridge No. 4
Highway No. VT. 110	Log Sta.
	Surv. Sta.
VT. 110 OVER THE FIRST BRANCH OF WHITE RIVER	
REINFORCING SCHEDULE (2 OF 2)	
Designed By JH	Drawn By MWS
Checked By RMR Date 3/03	Bridge Design Supervisor LMM Date 3/03
PROJECT	PROJECT NO.
I.G.C. info.	
Bridge Sheet No.	Sheet 109 of 128