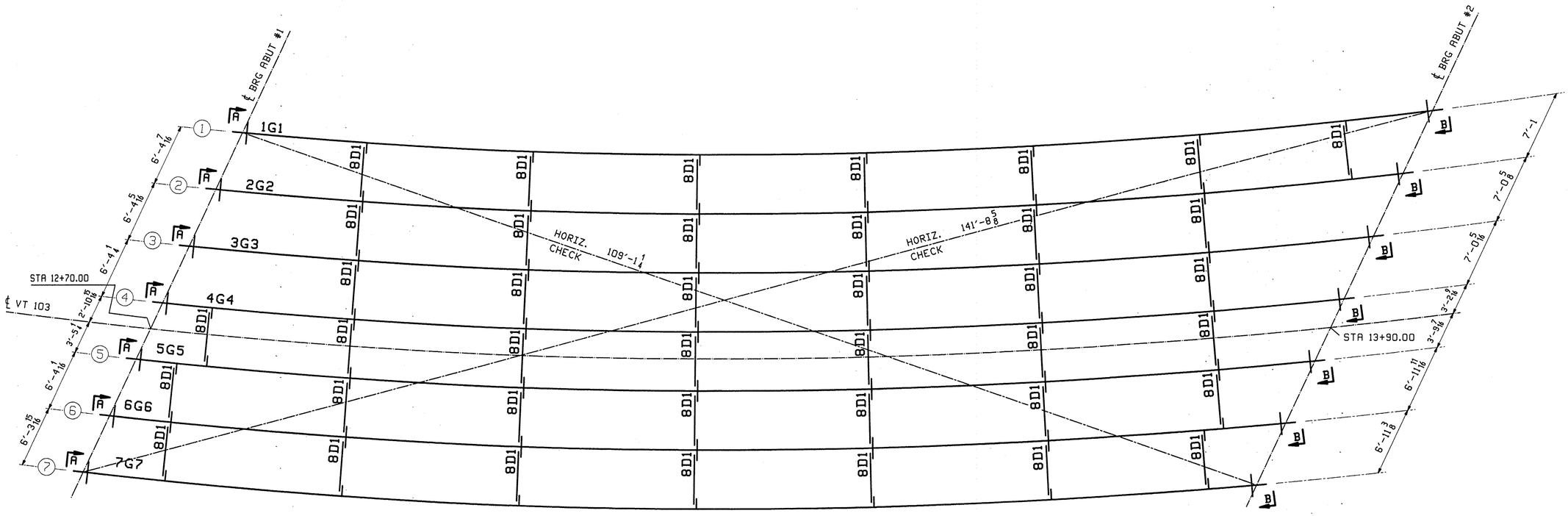

FRAMING PLAN
ANCHOR BOLT PLAN

FIELD BOLT LIST							A325 Type 3 BOLTS						VTE RTE 103
LINE	NO REQ'D.	BOLT DIAM.	BOLT LEN.	BOLTS /CONN.	# OF CONN.	GRIP	THICKNESS OF PCS. CONNECTED					WASH CODE	PIECES CONNECTED AND REMARKS
1													
2	880	7/8	2 1/2	11	80	1 1/8	1/2	5/8				1	CONN. STIFF TO W40X149
3													
WASHER CODES													
1: 1 Hard Flat Washer													

FIELD BOLT SUMMARY				EXACT COUNT		VTE RTE 103
LINE	NO. OF BOLTS	BOLT DIAM.	TYPE	BOLT LEN	ACTUAL COUNT	REMARKS
1	880	7/8	A325 Type 3	2 1/2	880	
2						
3	880	Hard Flat Washers for 7/8 ø BOLT				
4						
5						
6						

RECEIVED
CK'D BY ELC OK'D BY RSY
DEC 14 2010
RESUBMIT ____ APPROVED ✓
BY OPW DATE 12/3d/10

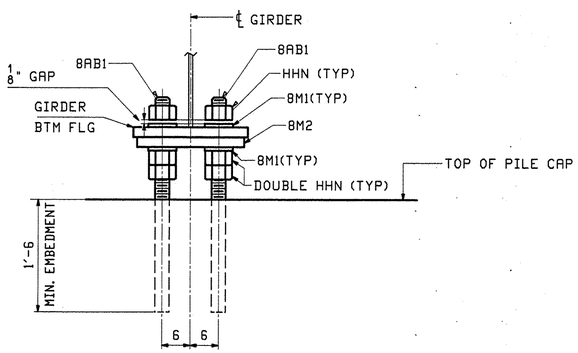

SECTION - A

NOTE: GREASE TOP OF SOLE ℙ
BEFORE GIRDER PLACEMENT

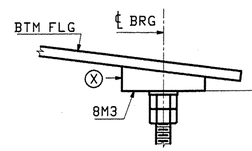

VIEW-C

X DENOTES THICKER SIDE OF SOLE PL

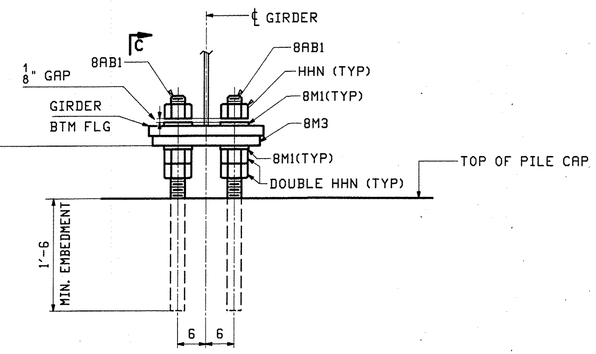

SECTION - B

NOTE: GREASE TOP OF SOLE ℙ
BEFORE GIRDER PLACEMENT

REV.	DATE	REMARKS	DWN	CHK	APVL	SHOP
0				DEC 9 2010		

MATERIAL: | SURFACE PREP. & PAINT: | HOLES: | SHOP BOLTS:

DESCRIPTION: FRAMING PLAN & ANCHOR BOLT PLAN

CASCO BAY STEEL STRUCTURES, INC.
75 SPRING HILL ROAD SACO, MAINE 04072
PHONE (207) 282-7360 FAX. (207) 282-1179
TENSOR 3030

STRUCTURE: VT 103 over Middle Branch Williams Rv.
Bridge 9
CHESTER
County of Windsor

DRAWN: TG	DATE: 11/18		
CHKD: DO	DATE: 12/02		
LOCATION: Town of Chester	JOB NO.	DWG NO.	
PROJ NO. BRF 025-1(37)	476	E1	
CUSTOMER: Cold River Bridges		REV. △	

DO Fri, Dec 3, 2010 02:31:19 PM P:\ccsr\jobs\2010\E1 & Rev0