ABM INFO PAGE	ABM INFO LINE	SHIP MARK	QTY	MARK	MATERIAL	LENGTH FT	LENGTH INCHES	REMARKS	WT	PROCUREMENT NOTES
		3G3	1		GIRDER				28417	
2	L		1	wa	PL $\frac{5}{8}$×46	41	$7\frac{1}{8}$	M270-50WT2		
1	Y		1	wb	PL $\frac{5}{8}$×46	79	$8\frac{1}{16}$	M270-50WT2		
3	E		1	ta	PL $\frac{7}{8}$×18	43	6			
2	S		1	tb	PL $\frac{7}{8}$×18	77	$8\frac{3}{4}$			
1	S		1	ba	PL $1\frac{1}{4}$×18	43	6	M270-50WT2		
1	N		1	bb	PL $1\frac{1}{4}$×18	77	$7\frac{9}{16}$	M270-50WT2		
4	B		6	x1a	PL $\frac{1}{2}$×$7\frac{1}{2}$	3	10	M270-50WT2		
4	B		3	x1b	PL $\frac{1}{2}$×$7\frac{1}{2}$	3	10	M270-50WT2		
4	B		1	x1c	PL $\frac{1}{2}$×$7\frac{1}{2}$	3	10	M270-50WT2		
4	B		1	x1d	PL $\frac{1}{2}$×$7\frac{1}{2}$	3	10	M270-50WT2		
4	C		4	x1f	PL $\frac{1}{2}$×$7\frac{1}{2}$	3	10	(MIE) M270-50WT2		
4	B		1	x1n	PL $\frac{1}{2}$×$7\frac{1}{2}$	3	10	M270-50WT2		

JOB NO. 476 — DRAWING NO. 3 — REV.

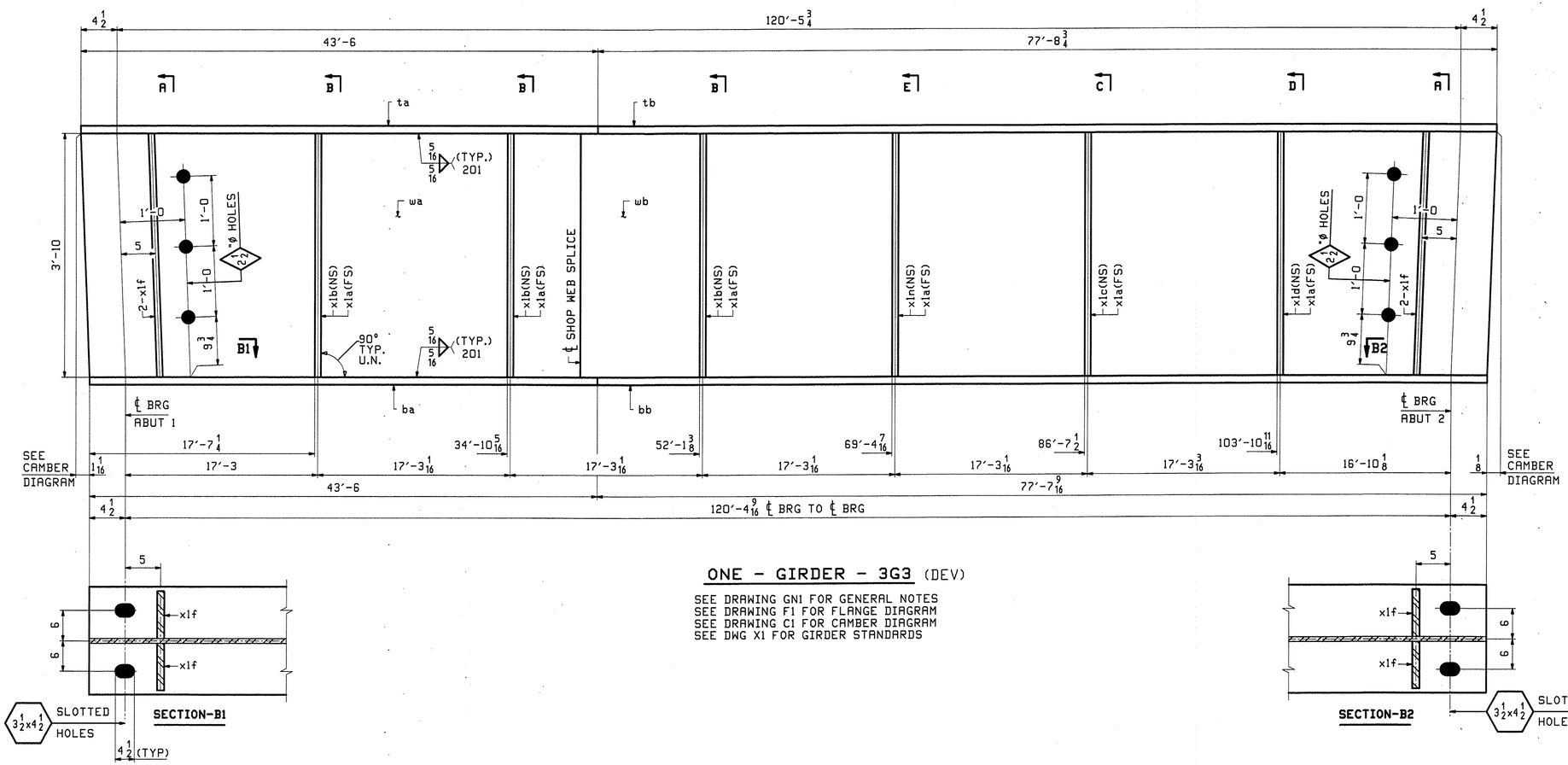

ONE - GIRDER - 3G3 (DEV)

SEE DRAWING GN1 FOR GENERAL NOTES
SEE DRAWING F1 FOR FLANGE DIAGRAM
SEE DRAWING C1 FOR CAMBER DIAGRAM
SEE DWG X1 FOR GIRDER STANDARDS

SECTION-B1

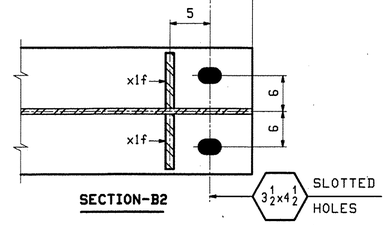

SECTION-B2

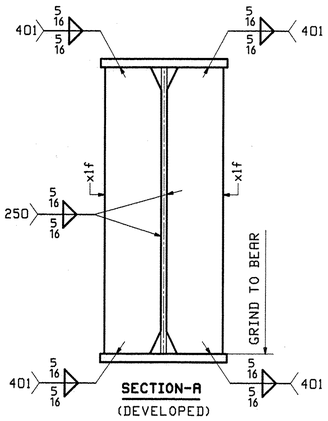

SECTION-A (DEVELOPED)

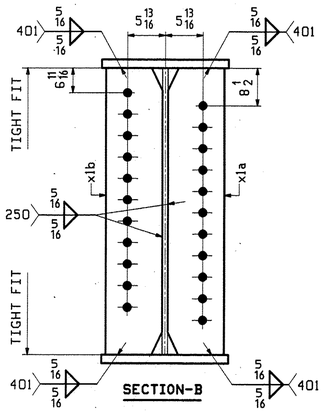

SECTION-B

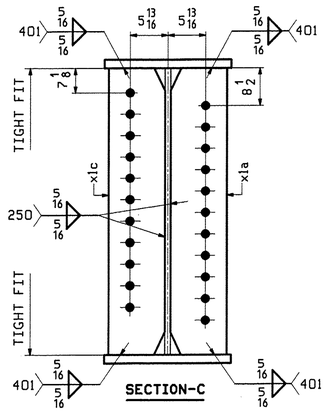

SECTION-C

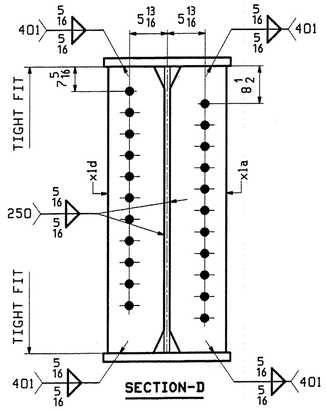

SECTION-D

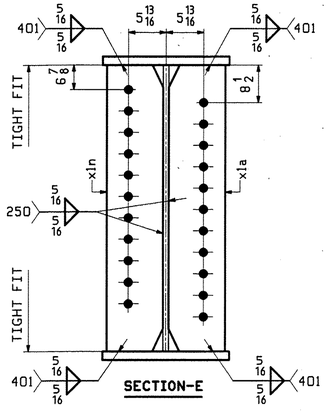

SECTION-E

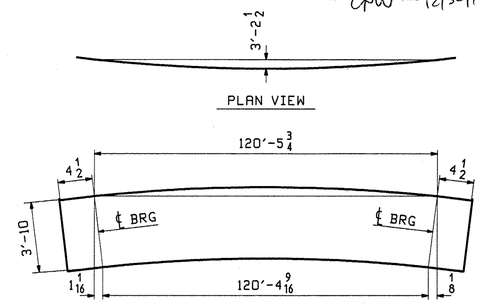

DEV. ORIENTATION DIAGRAM

ELC 8/54
AS NOTED
CPW 12/30/10

REV.	DATE	REMARKS	DWN	CHK	APVL	SHOP
0						

MATERIAL: M270-GR50W (U.N)
SURFACE PREP. & PAINT: SSPC-SP6/10
HOLES: $\frac{15}{16}$" ø (U.N)
SHOP BOLTS: N/A

DESCRIPTION: GIRDER 3G3

CASCO BAY STEEL STRUCTURES, INC.
75 SPRING HILL ROAD SACO, MAINE 04072
PHONE (207) 282-7360 FAX. (207) 282-1179
TENSOR 3030

STRUCTURE: VT 103 over Middle Branch Williams Rv. Bridge 9 CHESTER County of Windsor

DRAWN: TG DATE: 11/19
CHKD: DO DATE: 11/30

LOCATION: Town of Chester
PROJ NO. BRF 025-1(37)
CUSTOMER: Cold River Bridges

JOB NO. 476
DWG NO. 3
REV.