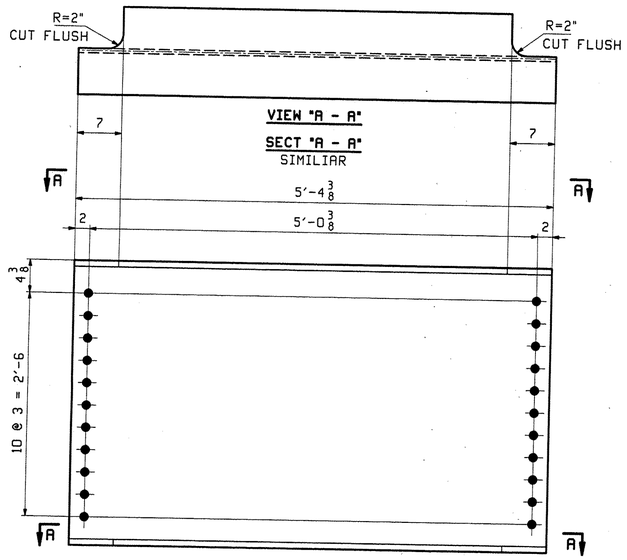

40 ~ DIAPHRAGMS ~ 8D1

SSPC-SP8/10

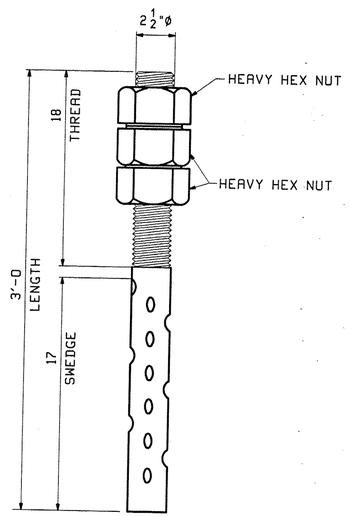

28 ~ SWEDGE ANCHOR BOLT ~ 8AB1

SHOP NOTE:
FABRICATE 1 EXTRA ANCHOR BOLT $2\frac{1}{2}$"ø x 3'-0
AS SHOWN ABOVE FOR TESTING PURPOSES.

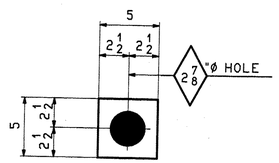

56 ~ PLATE WASHERS ~ 8M1

SSPC-SP8/10

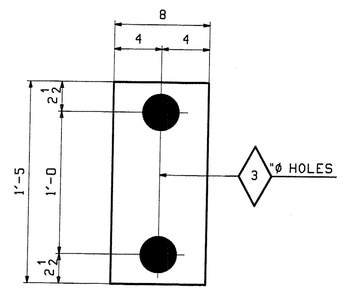

7 ~ SOLE PLATES ~ 8M2

SSPC-SP8/10

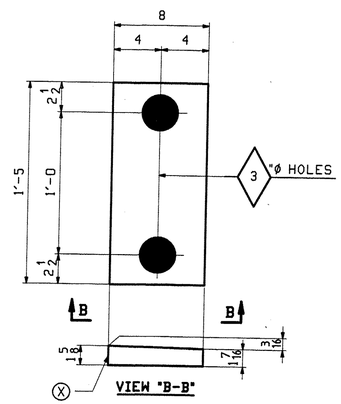

7 ~ SOLE PLATES ~ 8M3

SSPC-SP8/10

(X) DENOTES THICKER
SIDE OF SOLE PL

ABM INFO		SHIP		BILL OF MATERIAL					JOB NO. 476	DRAWING NO. 8	REV.
PAGE	LINE	MARK	QTY	MARK	MATERIAL	LENGTH FT	LENGTH INCHES	REMARKS	WT	PROCUREMENT NOTES	
		8D1	40		DIAPHRAGMS				795		
4	E		40		W 40x149	5	4 3/8	M270-50WT2			
		8AB1	28		ANCHOR BOLTS				17		
4	K		28		2 1/2 ø BLT	3	0	SWEDGED R449			
4	L		84		2 1/2 ø HHN			M291			
		8M1	56		PLATE WASHER				4		
4	G		56		PL 1/2x5	0	5	M270-36			
		8M2	7		SOLE PLATE				58		
4	H		7		PL 1 1/2x8	1	5	M270-36			
		8M3	7		SOLE PLATE				63		
4	J		7		PL 1 5/8x8	1	5	FIS M270-36			

RECEIVED
ENG. ELC OPER. BSY
DEC 14 2010
INTERCHART APPROVED As NOTED
BY CPW DATE 12/30/10

FOR GENERAL NOTES SEE GN1

REV.	DATE	REMARKS	DWN	CHK	APVL	SHOP
0						

MATERIAL:	SURFACE PREP. & PAINT:	HOLES:	SHOP BOLTS:
M270-GR50WT2 (U.N)	AS NOTED	15/16" ø (U.N)	N/A

DESCRIPTION: DIAPHRAGMS

CASCO BAY STEEL STRUCTURES, INC.
75 SPRING HILL ROAD SACO, MAINE 04072
PHONE (207) 282-7360 FAX. (207) 282-1179
TENSOR 3030

STRUCTURE:	VT 103 over Middle Branch Williams Rv. Bridge 9 CHESTER County of Windsor	DRAWN: TG	DATE: 11/18
		CHKD: DO	DATE: 12/02
LOCATION:	Town of Chester	JOB NO. 476	DWG NO. 8
PROJ NO.	BRF 025-1(37)		
CUSTOMER:	Cold River Bridges		REV.