RECEIVED
OK'D BY LJS OK'D BY KSY
MAR 11 2011
RESUBMIT ____ APPROVED ✓
BY CPW DATE 3/28/11

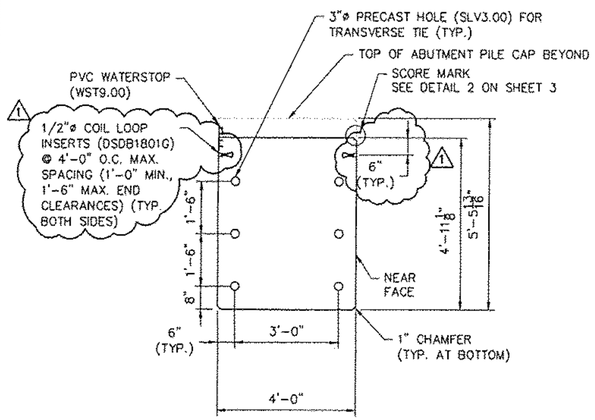

1 BAW-05 SECTION A
SCALE: 1/2" = 1'-0"

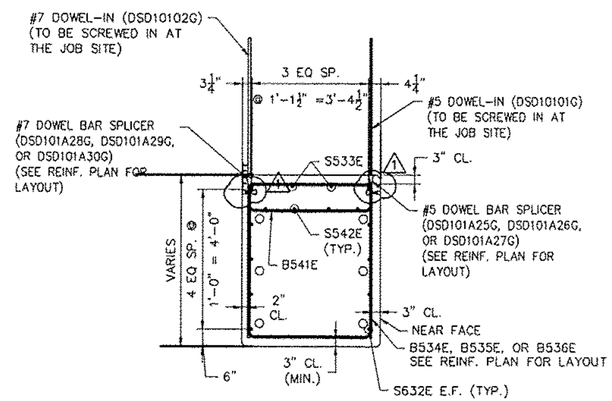

2 BAW-05 SECTION B
SCALE: 1/2" = 1'-0"

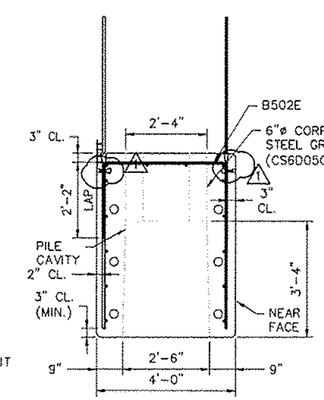

3 BAW-05 SECTION C
SCALE: 1/2" = 1'-0"

BAR DIMENSIONS

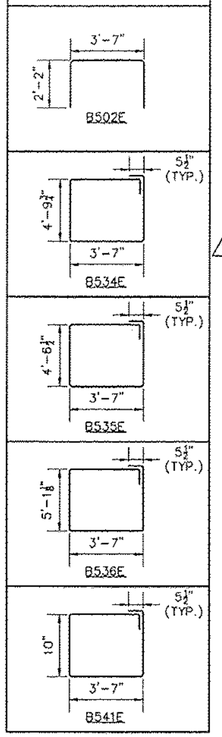

NOTE:
REBAR DIMENSIONS ARE OUT TO OUT.

PARTS & PART NUMBERS

PART NO.	DESCRIPTION	QTY.
B502E	#5 X 7'-11" EPOXY COATED	4
S632E	#6 X 20'-3" EPOXY COATED	12
S533E	#5 X 20'-2" EPOXY COATED	2
B534E	#5 X 17'-8 1/2" EPOXY COATED	7
B535E	#5 X 17'-2" EPOXY COATED	8
B536E	#5 X 16'-11 1/4" EPOXY COATED	2
B541E	#5 X 8'-9" EPOXY COATED	6
S542E	#5 X 7'-10 3/4" EPOXY COATED	4
1 DSDB1801G	1/2"ø, 4" LONG, COIL LOOP INSERT	12
CS4D01G	4"ø CORRUGATED STEEL SLEEVE 1'-8" LONG, GALV.	6
WST9.00	PVC WATERSTOP 20'-9" LONG BASE SEAL TYPE 771 BY GREENSTREAK	1
MBRL2301G	RAPID LIFT, 22 TON, 15" LONG, GALV.	4
MBRL4502	RECESS PLUG, 22 TON	4
SLV3.00	3" I.D. RIGID PLASTIC SLEEVE	6
CS6D05G	6" ø CORRUGATED STEEL PIPE, GALV., 2'-0" LONG (MAX.)	4
DSD101A25G	#5 DOWEL BAR SPLICER, 5'-0 3/4" LONG	7
DSD101A26G	#5 DOWEL BAR SPLICER, 4'-10 1/4" LONG	7
DSD101A27G	#5 DOWEL BAR SPLICER, 4'-8 1/8" LONG	7
DSD101A28G	#7 DOWEL BAR SPLICER, 5'-0 3/4" LONG	7
DSD101A29G	#7 DOWEL BAR SPLICER, 4'-10 1/4" LONG	7
DSD101A30G	#7 DOWEL BAR SPLICER, 4'-8 1/8" LONG	7
	VERMONT STATE MIX DESIGN	
	DO NOT CAST – SHIP TO JOBSITE	
DSD10101G	#5 DOWEL-IN, 4'-0 1/8" LONG	21
DSD10102G	#7 DOWEL-IN, 4'-0 3/8" LONG	21

NOTE:
ALL ITEMS LISTED ABOVE ARE SUGGESTED PRODUCTS. FABRICATOR MAY SUBSTITUTE APPROVED EQUALS AS NECESSARY.

REVISION NO.	REVISION DATE
1	MARCH 09, 2011

MATERIAL SPECIFICATION

CONCRETE:
28 DAY STRENGTH: 5000 PSI
RELEASE STRENGTH: 3000 PSI
MILD REINFORCING: AASHTO M31, GRADE 60, EPOXY COATED

FINISHES
ENDS: FORM FINISH
TOP: RAKE FINISH, 1/4" AMPLITUDE
BOTTOM: FORM FINISH
SIDES: FORM FINISH

DUNNAGE:
STORAGE: BELOW LIFT ANCHORS
SHIPPING: BELOW LIFT ANCHORS

BAW-05
TOTAL WEIGHT: 58,201 LBS
CONC. YARDAGE: 14.37 CY

CONSTRUCTION SET
FEBRUARY 18, 2011

Hoyle, Tanner & Associates, Inc.
125 College Street, 4th Floor Burlington, VT 05401
Tel (802)860-1331 • Fax (802)860-6499 • www.hoyletanner.com

© Copyright 2011 Hoyle, Tanner & Associates, Inc.

DRAWN BY: AFN DATE: FEBRUARY 2011
CHECKED BY: CHS PROJECT NO: 122435.00

W.E. DAILEY INC.
AIRPORT ROAD • SWANTON, VT 05262
PRECAST CONCRETE PRODUCTS
TEL: (802) 442-4416 FAX: (802) 442-4719

CHESTER, VT
VT 103
BRIDGE #9

PROJECT NO.: BRF 025-1 (37)

SHEET 13 OF 15