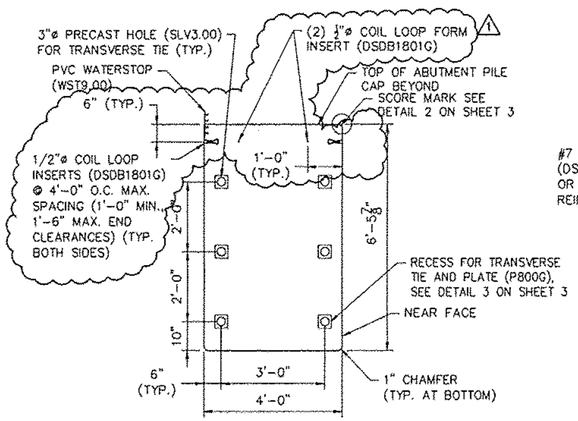

1 BAW-01 SECTION A
SCALE: ½" = 1'-0"

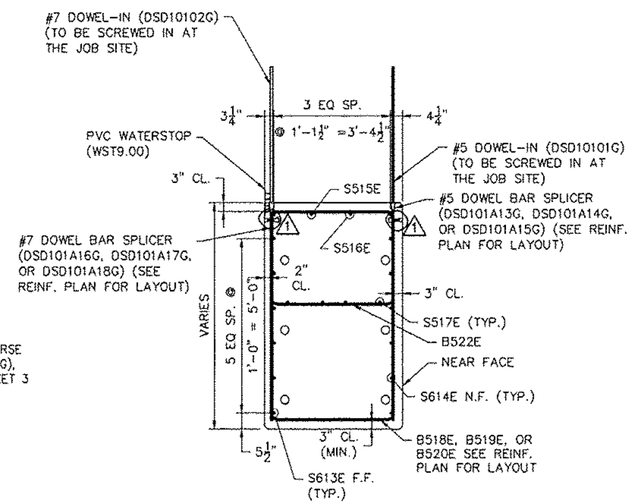

2 BAW-01 SECTION B
SCALE: ½" = 1'-0"

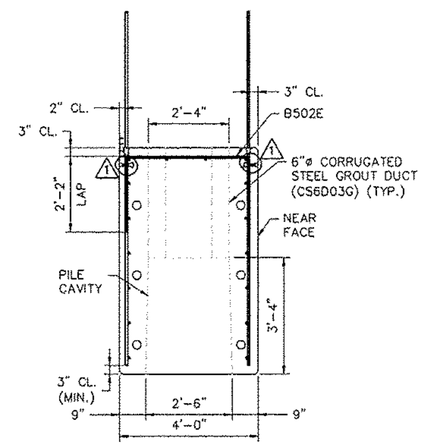

3 BAW-01 SECTION C
SCALE: ½" = 1'-0"

BAR DIMENSIONS

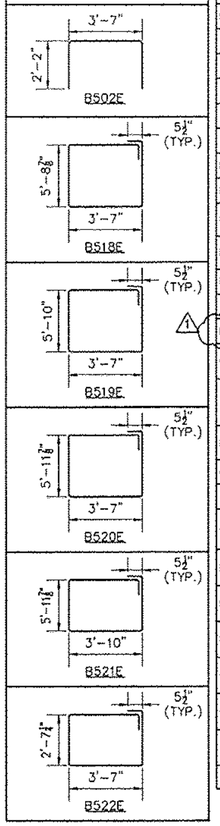

NOTE:
REBAR DIMENSIONS ARE OUT TO OUT.

PARTS & PART NUMBERS

PART NO.	DESCRIPTION	QTY.
B502E	#5 X 7'-11" EPOXY COATED	4
S613E	#6 X 16'-11⅞" EPOXY COATED	7
S614E	#6 X 15'-11⅞" EPOXY COATED	7
S515E	#5 X 16'-7⅝" EPOXY COATED	1
S516E	#5 X 16'-3⅜" EPOXY COATED	1
S517E	#5 X 7'-7¼" EPOXY COATED	4
B518E	#5 X 19'-6¾" EPOXY COATED	4
B519E	#5 X 19'-9" EPOXY COATED	8
B520E	#5 X 20'-0¾" EPOXY COATED	1
B521E	#5 X 20'-6¾" EPOXY COATED	1
B522E	#5 X 13'-3¼" EPOXY COATED	5
DSDB1801G	½"ø, 4" LONG, COIL LOOP INSERT	12
CS4D01G	4"ø CORRUGATED STEEL SLEEVE 1'-8" LONG, GALV.	4
WST9.00	PVC WATERSTOP 18'-4 5/16" LONG BASE SEAL TYPE 771 BY GREENSTREAK	1
MBRL2301G	RAPID LIFT, 22 TON, 15" LONG, GALV.	4
MBRL4502	RECESS PLUG, 22 TON	4
SLV3.00	3" I.D. RIGID PLASTIC SLEEVE	6
CS6D03G	6" ø CORRUGATED STEEL PIPE, GALV., 3'-2" LONG (MAX.)	4
DSD101A13G	#5 DOWEL BAR SPLICER, 5'-11⅞" LONG	5
DSD101A14G	#5 DOWEL BAR SPLICER, 6'-1" LONG	6
DSD101A15G	#5 DOWEL BAR SPLICER, 6'-5⅛" LONG	5
DSD101A16G	#7 DOWEL BAR SPLICER, 5'-11⅞" LONG	5
DSD101A17G	#7 DOWEL BAR SPLICER, 6'-1" LONG	6
DSD101A18G	#7 DOWEL BAR SPLICER, 6'-5⅛" LONG	6
	VERMONT STATE MIX DESIGN	

NOTE:
ALL ITEMS LISTED ABOVE ARE SUGGESTED PRODUCTS. FABRICATOR MAY SUBSTITUTE APPROVED EQUALS AS NECESSARY.

PARTS & PART NUMBERS

	DO NOT CAST – SHIP TO JOBSITE	
DSD10101G	#5 DOWEL-IN, 4'-0⅜" LONG	16
DSD10102G	#7 DOWEL-IN, 4'-0⅜" LONG	17
P800G	½"x4½"x4½" GALVANIZED PLATE	6

1"x6"x6"

MATERIAL SPECIFICATION

CONCRETE:
28 DAY STRENGTH: 5000 PSI
RELEASE STRENGTH: 3000 PSI
MILD REINFORCING: AASHTO M31, GRADE 60, EPOXY COATED

FINISHES
ENDS: FORM FINISH
TOP: RAKE FINISH, ¼" AMPLITUDE
BOTTOM: FORM FINISH
SIDES: FORM FINISH

DUNNAGE:
STORAGE: BELOW LIFT ANCHORS
SHIPPING: BELOW LIFT ANCHORS

BAW-01
TOTAL WEIGHT: 57,960 LBS
CONC. YARDAGE: 14.31 CY

RECEIVED
OK'D BY LDS OK'D BY RSY
MAR 11 2011
RESUBMIT ____ APPROVED As Noted
BY CPW DATE 3/28/11

REVISION NO.	REVISION DATE
1	MARCH 09, 2011

Hoyle, Tanner & Associates, Inc.
125 College Street, 4th Floor Burlington, VT 05401
Tel (802)860-1331 • Fax (802)860-6499 • www.hoyletanner.com

© Copyright 2011 Hoyle, Tanner & Associates, Inc.

DRAWN BY: APN DATE: FEBRUARY 2011
CHECKED BY: CHS PROJECT NO: 122435.00

STATE OF VERMONT CHARLES H. SCHULZ No. 8120 Structural LICENSED PROFESSIONAL ENGINEER

W.E. DAILEY INC.
AIRPORT ROAD - SALISBURY, VT 05769
PRECAST CONCRETE PRODUCTS
TEL: (802) 442-4416 FAX: (802) 442-4713

CONSTRUCTION SET
FEBRUARY 18, 2011

CHESTER, VT
VT 103
BRIDGE #9

PROJECT NO.: BRF 025-1 (37)