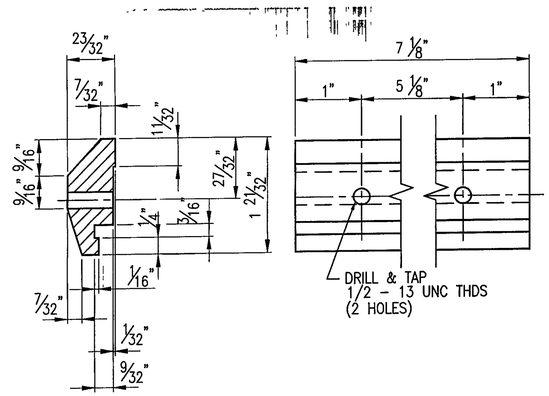

88 ~ REQ'D CLAMP
BAR CB-03-A #19447
(BARRIER RAIL)

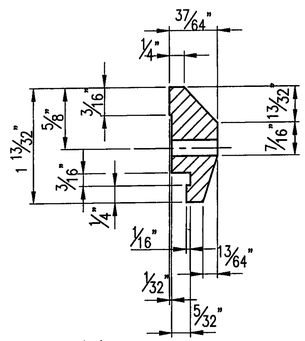

44 ~ REQ'D CLAMP
BAR CB-01-H
(HANDRAIL)

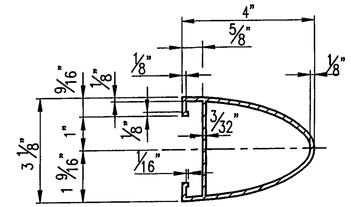

TYPICAL SECTION
(HANDRAIL)

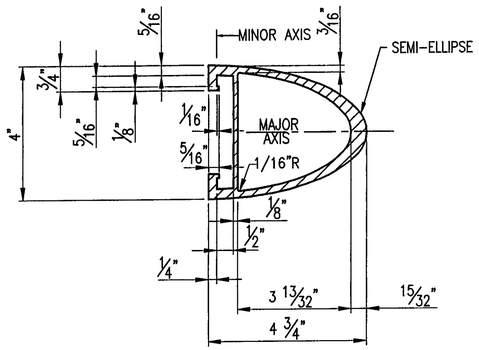

TYPICAL SECTION
(BARRIER RAIL)

ANODIZED

- ALL ALUM. COMPONENTS SHALL BE ANODIZED TO A BLACK (HARD SATIN FINISH) COLOR, FED. STD. COLOR No. 27038. THE ANODIC COATING SHALL BE ARCHITECTURAL CLASS I WITH A MIN. THICKNESS OF 0.7 mils AND A MIN. WEIGHT OF 35 mg/sq in
- ALL VISIBLE STN. STL. HARDWARE SHALL BE FIELD PAINTED BLACK TO MATCH THE ANODIZED RAIL. TOUCH UP PAINT SHALL BE PROVIDED.
- SAMPLES SHALL BE SUBMITTED FOR THE ENGINEER'S APPROVAL.

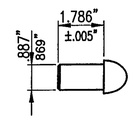

RIVET DETAIL 'rv1'
#19420

GENERAL NOTES

ALL MATERIAL AND WORKMANSHIP SHALL BE IN ACCORDANCE WITH VERMONT AGENCY OF TRANSPORTATION STANDARD SPECIFICATIONS FOR CONSTRUCTION DATED 2001 AND ITS LATEST REVISIONS

DESCRIPTION	ASTM	ALLOY/GR.	REMARKS
RAILS, POSTS, BASES, SPLICES, CLAMP BARS, PINS, & BALUSTER FRAMES	B221	6061-T6 OR 6351-T5	MIN YIELD STRENGTH Fy = 35,000 psi.
BALUSTERS	B221	6061 OR 6063	T4 - USED FOR SUPERIOR EXPANDING QUALITIES
RIVETS	B316	6061-T6	BUTTON HD., CONE PT.
SET SCREWS FOR BALUSTERS	F880	TYPE 303	
STAINLESS STEEL BOLTS	A193	GRADE B8	
ANCHOR RODS	A449		GALV A153
STEEL HEX. NUTS	A563	GRADE DH	GALV. A153
STEEL WASHERS	F436		GALV. A153
ANCHOR PLATES	A569		COMMERCIAL QUALITY (PLAIN)
ALUMINUM WASHERS	B209	2024-T4	
PREFORMED PADS			SECTION 731 01 OR 731.02
ELECTRODES FOR WELDING	AWS A5.10 ER5356		

POSTS TO BE NORMAL TO GRADE AND RAILS SHALL BE PARALLEL TO GRADE. RAILS TO BE ATTACHED TO A MINIMUM OF THREE POSTS WHEN POSSIBLE

ALL RAILS AND WELDS TO BE FREE FROM ALL BURRS AND ROUGH EDGES. ENDS OF TUBE SECTIONS SHALL BE SAWED OR MILLED GRIND ALL CUT EDGES SMOOTH.

ALL THREADS TO BE UNC CLASS 2A/2B.

ALL EXTRUSION TOLERANCES NOT SHOWN SHALL BE IN ACCORDANCE WITH ASTM B221

IF CUT THREADS ARE USED, BOLT DIAMETER SHALL NOT BE LESS THAN NOMINAL DIAMETER. IF ROLLED THREADS ARE USED, BOLT DIAMETER SHALL NOT BE LESS THAN THE ROOT DIAMETER OF THREADS

THE SPLICE BAR SHALL BE ATTACHED TO THE RAIL ELEMENT AS FOLLOWS:
THE RAIL SPLICE AT THE BRIDGE EXPANSION JOINT SHALL BE FASTENED ON BOTH SIDES OF THE RAIL SPLICE USING THE FULLY THREADED WASHER FACED BOLTS, TIGHTENED SECURELY TO THE END OF THREADS, AND LEAVING A 1/8" GAP, THIS ALLOWS EXPANSION ON BOTH SIDES OF THE JOINT

ALL NUTS SHALL COMPLY WITH AMERICAN HEXAGON ANSI SPECIFICATIONS B18.2

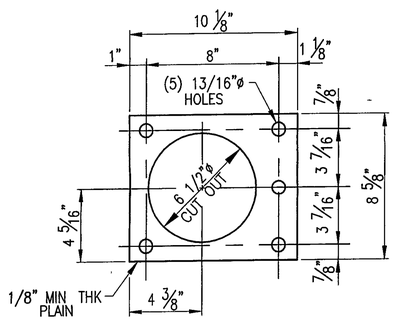

22 ~ REQ'D ANCHOR PLATE AP1
#31286

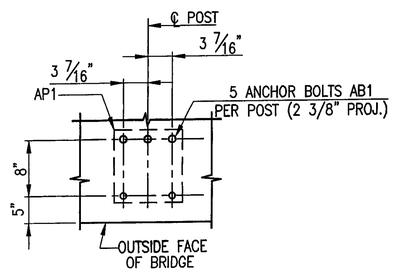

TYPICAL ANCHOR BOLT SETTING

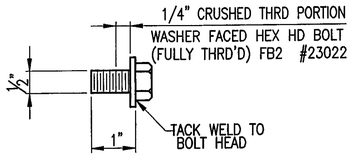

SPLICE BOLT DETAILS

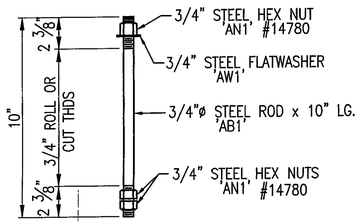

110 ~ REQ'D ANCHOR BOLTS AB1

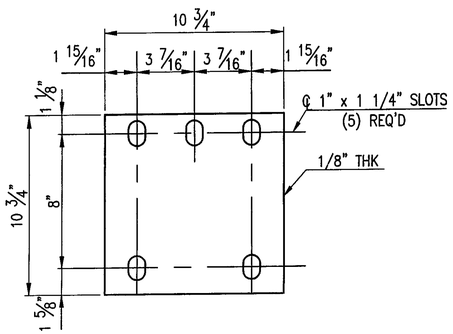

22 ~ REQ'D FABRIC PADS 'EP1'

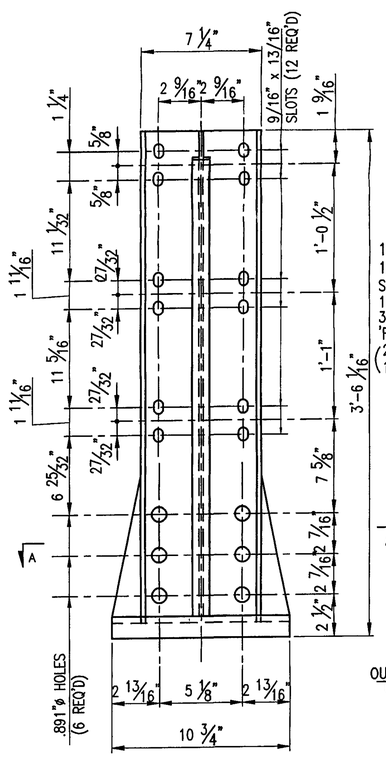

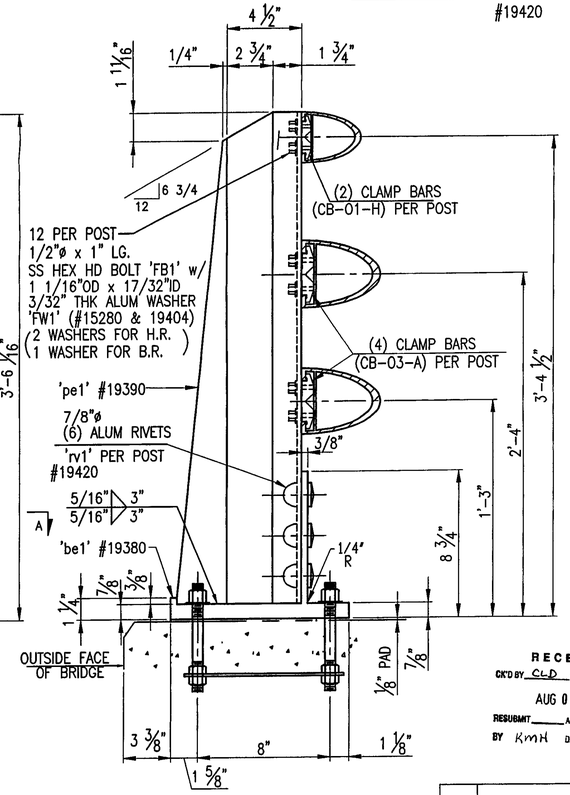

22 ~ REQ'D FABRICATED RAIL POSTS P-301-K
(SIDEWALK)

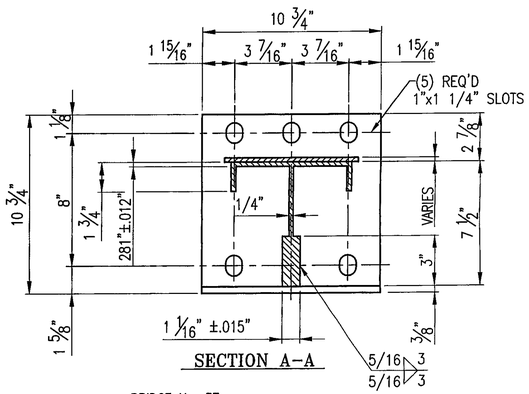

SECTION A-A

RECEIVED
CK'D BY CLD OK'D BY GAS
AUG 0 3 2007
RESUBMIT ____ APPROVED ✓
BY KMH DATE 8/13/07

BRIDGE No. 37
PROJECT No. BRF 030-2(17)S
ITEM No: 525 23

APPROVED: _____ REC'D APPROVAL ____ DRAWING ____

L.B. FOSTER COMPANY
1016 GREENTREE ROAD
PITTSBURGH, PENNSYLVANIA 15220

FOR: F. R LAFAYETTE, INCORPORATED
VERMONT AGENCY OF TRANSPORTATION
TOWN OF JOHNSON, COUNTY OF LAMOILLE
BRIDGE RAILING FOR VT15 (MINOR ARTERIAL) OVER GIHON RIVER
3L ALUM BRIDGE RAILING ~ GENERAL NOTES & TYP DETAILS

MADE CMS DATE 05/21/07 JOB No AR0395 CUST No
CHECK BLJ DATE 05/31/07 DRAWING LB1 REV. No.

REV	DESCRIPTION	BY	DATE