ABM INFO		SHIP	BILL OF MATERIAL					JOB NO.	DRAWING NO	REV.
								323	3	
PAGE	LINE	MARK	QTY	MARK	MATERIAL	LENGTH FT	LENGTH INCHES	REMARKS	WT	PROCUREMENT NOTES
		3G4A	1		GIRDER				14503	
1	E		1	wa	PL $\frac{1}{2}$×27$\frac{5}{8}$	76	6$\frac{5}{16}$	(M270-50T2) (H2-3)		
1	C		1	ta	PL $\frac{7}{8}$×16	76	6$\frac{5}{16}$			
1	A		1	ba	PL 1$\frac{1}{2}$×18	76	5$\frac{5}{8}$	(M270-50T2) (H2-3)		
2	B		4	x1b	PL $\frac{1}{2}$×5	2	3$\frac{5}{8}$			
2	B		8	x1c	PL $\frac{1}{2}$×5	2	3$\frac{5}{8}$			

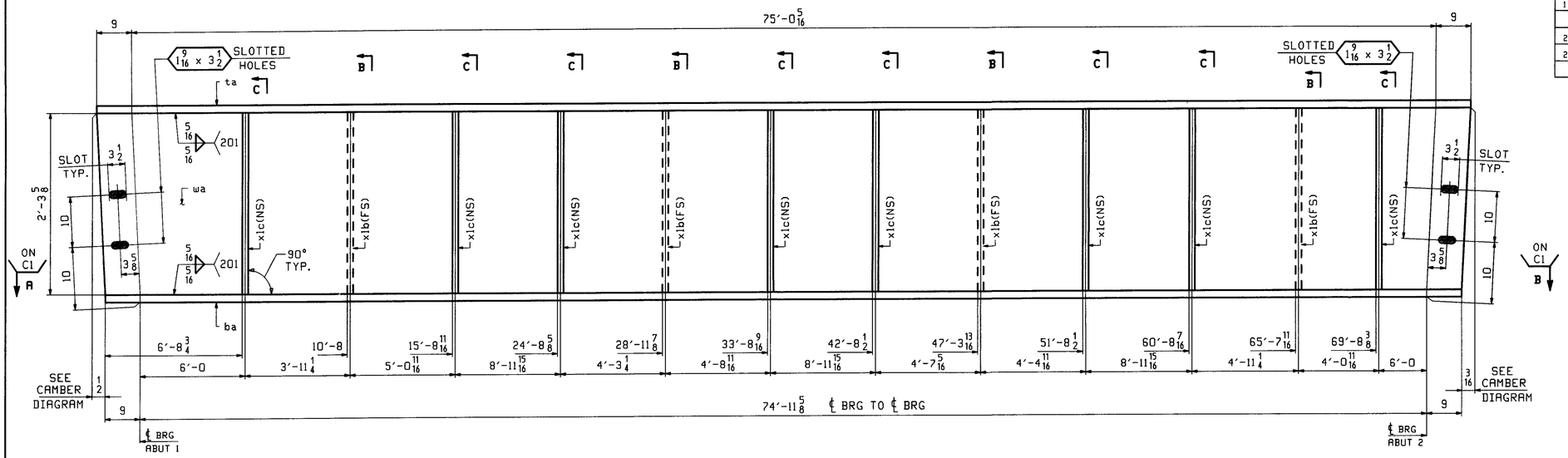

ONE - GIRDER - 3G4A

FOR GIRDER STANDARD DETAILS SEE DRAWING X1.
FOR CAMBER DIAGRAM SEE DRAWING C1.
FOR GENERAL NOTES SEE DRAWING GN1.
H2-3 DENOTES MATERIAL SUBJECT TO CHARPY V-NOTCH TESTING.

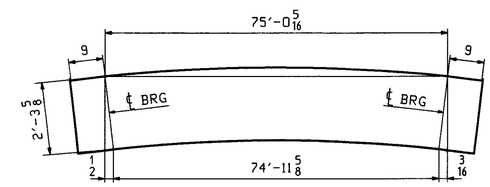

ORIENTATION DIAGRAM

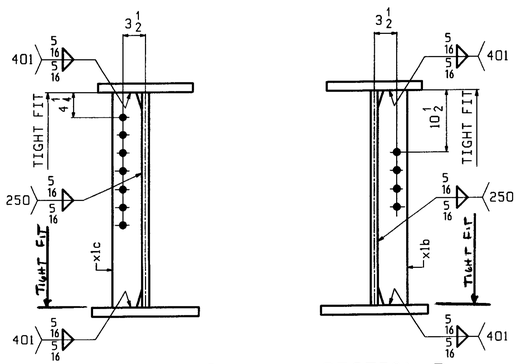

SECTION-C

SECTION-B

OUT FOR APPROVAL	5-24-07									
OUT FOR APPROVAL										
ISSUED TO SHOP										
FIELD & OFFICE										
REV.	REMARKS	DATE	DWN	CHK	APP	Q.A.	NO.	DIA.	LGT	TYPE	WASHER

MATERIAL (UN)	ELECTRODES	HOLES.	SHOP BOLTS
M270 GR. 50		15/16 Ø (UN)	NONE

SURFACE PREP & PAINT

SEE PAINT NOTES ON DWG GN1

DESCRIPTION: GIRDER - 3G4A	DRAWN BY	DATE
JOB: VT. ROUTE 15 OVER THE GIHON RIVER	WR	05/17
BRIDGE NO 37	CHKD BY	
TOWN OF JOHNSON, VT. (LAMOILLE COUNTY)	DO	05/21
TENSOR 2716	APPROV BY	
	SUPERVISOR	W. J. GATTI
PROJ NO. BRF 030-2(17)S	Q.A.	
CUSTOMER: VT A.O.T		

RECEIVED
CK D BY CLO OK D BY
JUN 0 1 2007
RESUBMIT ___ APPROVED As Noted
BY DATE 6/7/07

CASCO BAY STEEL STRUCTURES, INC.
75 SPRING HILL ROAD SACO, MAINE 04072
PHONE (207) 282-7360 FAX. (207) 282-1179

JOB NO.	DRG. NO.
323	3
	REV. △

Tue May 22, 2007 04:40:25 PM /users/jobs/2716/3 Rev0