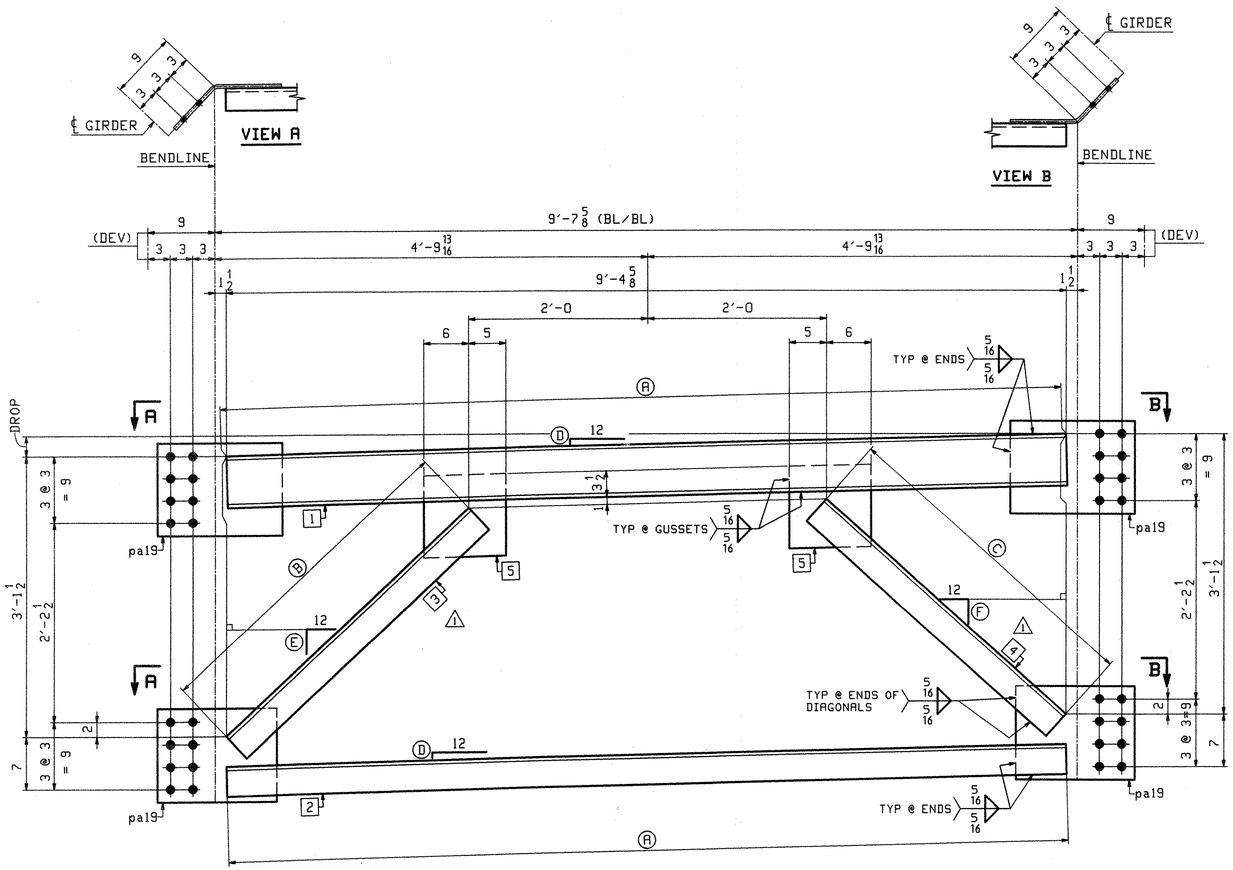

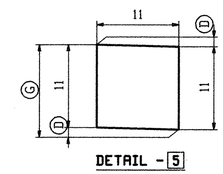

BRG CROSSFRAME - MARK "A"

MARK "A"	QTY	DROP	Ⓐ	Ⓑ⚠	Ⓒ⚠	Ⓓ	Ⓔ⚠	Ⓕ⚠	Ⓖ	1	2	3	4	5	
23CF1	1	5 3/16	9′-4 3/4	3′-8 1/16	3′-6 1/8	9/16	11 1/8	10	11 9/16	a23	b23	c23	d23	pa23	ABUT 2 LINES 5-6
23CF2	1	3 1/8	9′-4 11/16	3′-7 11/16	3′-6 1/2	5/16	10 15/16	10 1/4	11 5/16	f23	g23	k23	m23	pb23	ABUT 2 LINES 4-5
23CF3	2	7/8	9′-4 5/8	3′-7 1/4	3′-6 15/16	1/16	10 11/16	10 1/2	11 1/16	n23	p23	t23	v23	pc23	ABUT 2 LINES 3-4 PIER 2 LINES 2-3

ABM INFO PAGE	ABM INFO LINE	SHIP MARK	QTY	MARK	MATERIAL	LENGTH FT	LENGTH INCHES	REMARKS	WT	PROCUREMENT NOTES
		23CF1	1		END CROSSFRAME				580	
3	A		1	a23	MC 8x22.8 ⚠1	9	4 3/4			
3	C		1	b23	L 4x4x1/2	9	4 3/4			
3	D		1	c23	L 4x4x1/2	3	8 1/16	⚠1		
3	D		1	d23	L 4x4x1/2	3	6 1/8	⚠1		
3	F		4	pa19	PL 1/2x12 1/2	1	4 5/8	BENT		
3	E		2	pa23	PL 1/2x11	0	11 9/16			
		23CF2	1		END CROSSFRAME				579	
3	A		1	f23	MC 8x22.8 ⚠1	9	4 11/16			
3	C		1	g23	L 4x4x1/2	9	4 11/16			
3	D		1	k23	L 4x4x1/2	3	7 11/16	⚠1		
3	D		1	m23	L 4x4x1/2	3	6 1/2	⚠1		
3	F		4	pa19	PL 1/2x12 1/2	1	4 5/8	BENT		
3	E		2	pb23	PL 1/2x11	0	11 5/16			
		23CF3	2		END CROSSFRAME				578	
3	A		2	n23	MC 8x22.8 ⚠1	9	4 5/8			
3	C		2	p23	L 4x4x1/2	9	4 5/8			
3	D		2	t23	L 4x4x1/2	3	7 1/4	⚠1		
3	D		2	v23	L 4x4x1/2	3	6 15/16	⚠1		
3	F		8	pa19	PL 1/2x12 1/2	1	4 5/8	BENT		
3	E		4	pc23	PL 1/2x11	0	11 1/16			

BILL OF MATERIAL — JOB NO. 290 — DRAWING NO. 23 — REV. ⚠1

REV.	REMARKS	DATE	DWN	CHK	APP	Q.A.
OUT FOR APPROVAL	FINAL 2-17-06					
OUT FOR APPROVAL						
ISSUED TO SHOP						
FIELD & OFFICE						
⚠1	CHG MC7x22.7 TO MC8x22.8	07/10	JTB	PCP		

NO.	DIA.	LGT	TYPE	WASHER

MATERIAL: M270-50W (UN)
ELECTRODES:
HOLES: 15/16"Ø
SHOP BOLTS: NONE

SURFACE PREP. & PAINT:

PAINTED - SEE DRAWING GN1

DESCRIPTION: CROSSFRAMES
JOB: RTE 9 OVER ROARING BRANCH OF WALLOOMSAC RIVER
BRIDGE No. BR 11
WOODFORD, VT. BENNINGTON COUNTY

TENSOR 2608

	DRAWN BY	DATE
	JTB	02/26
	CHKD BY	
	PCP	03/06
	APPROV BY	
	SUPERVISOR	W. J. GATTI
	Q.A.	

PROJ NO. BHF 010-1(29)
CUSTOMER: RENAUD BROTHERS, INC.

CASCO BAY STEEL STRUCTURES, INC.
75 SPRING HILL ROAD SACO, MAINE 04072
PHONE (207) 282-7360 FAX. (207) 282-1179

JOB NO.	DRG. NO.
290	23
	REV. ⚠1

RECEIVED
CK'D BY _____ OK'D BY MJM
JUL 26 2006
RESUBMIT _____ APPROVED ✓
BY DATE 7/28/06