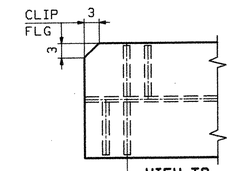

VIEW TA

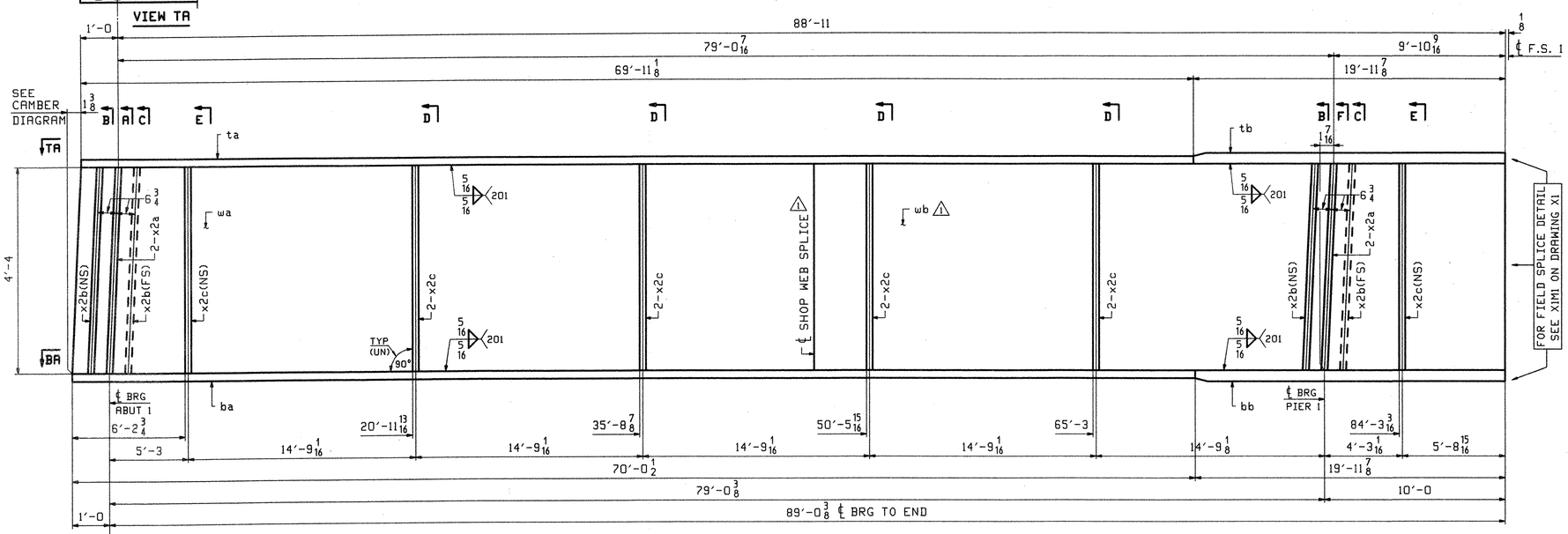

ONE - GIRDER - 3G3A

FOR FIELD SPLICE DETAILS SEE DRAWING X1.
FOR GIRDER STANDARD DETAILS SEE DRAWING X2.
FOR CAMBER & FLANGE DIAGRAMS SEE DRAWING C1.
FOR GENERAL NOTES SEE DRAWING GN1.
H2-3 DENOTES MATERIAL SUBJECT TO CHARPY V-NOTCH TESTING.

ABM INFO PAGE	ABM INFO LINE	SHIP MARK	QTY	MARK	MATERIAL	LENGTH FT	LENGTH INCHES	REMARKS	WT	PROCUREMENT NOTES
		3G3A	1		GIRDER				17973	
1	Q		1	wa	PL 1/2x52	46	6 5/8	(M270-50WT2) (H2-3)		1
1	S		1	wb	PL 1/2x52	43	6	(M270-50WT2) (H2-3)		1
1	C		1	ta	PL 7/8x16	69	11 1/8	(M270-50WT2) (H2-3)		
1	A		1	tb	PL 1x16	19	11 7/8	(M270-50WT2) (H2-3)		
1	C		1	ba	PL 7/8x16	70	0 1/2	(M270-50WT2) (H2-3)		
1	A		1	bb	PL 1x16	19	11 7/8	(M270-50WT2) (H2-3)		
2	H		4	x2a	PL 7/8x7 1/2	4	4	M1E		
2	J		4	x2b	PL 1/2x7 1/2	4	4			
2	J		10	x2c	PL 1/2x7 1/2	4	4			

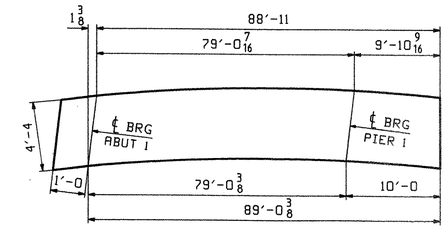

ORIENTATION DIAGRAM
FOR CAMBER SEE DRAWING C1

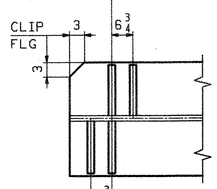

SECTION BA

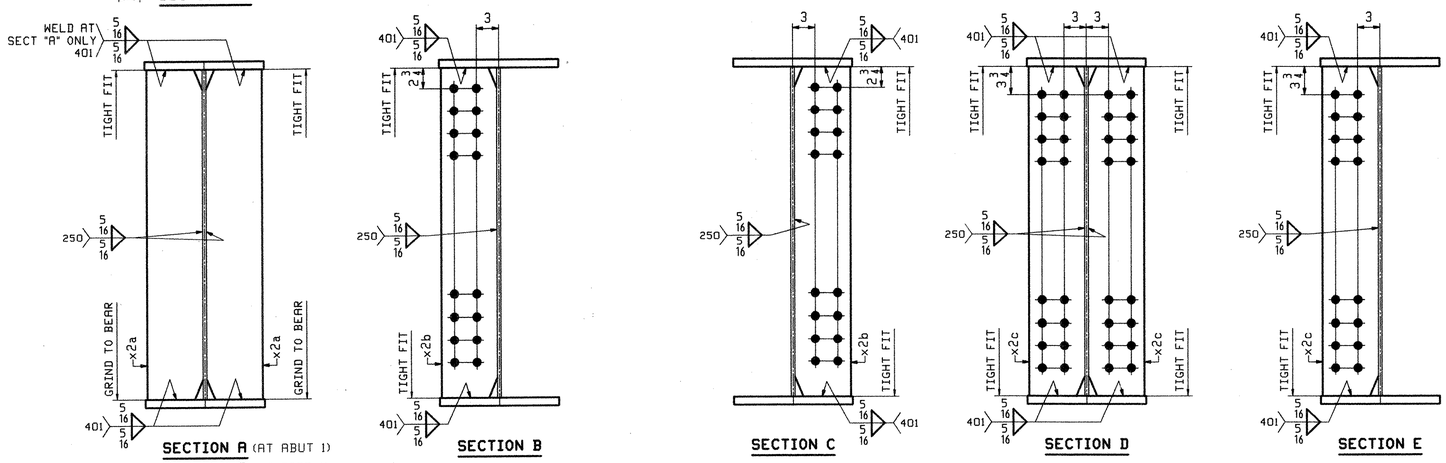

REV.	REMARKS	DATE	DWN	CHK	APP	Q.A.	NO.	DIA.	LGT	TYPE	WASHER
	OUT FOR APPROVAL	FMW 7-17-06									
	OUT FOR APPROVAL										
	ISSUED TO SHOP										
	FIELD & OFFICE										
1	ADD WEB SPLICE	JTB	PCP								

MATERIAL: M270-50W (UN)
ELECTRODES:
HOLES: 15/16"Ø
SHOP BOLTS: NONE
SURFACE PREP. & PAINT: SEE DRAWING GN1

RECEIVED
CK'D BY ____ OK'D BY MGM
JUL 26 2006
RESUBMIT ____ APPROVED ✓
BY DATE 7/28/06

DESCRIPTION: GIRDER - 3G3A
JOB: RTE 9 OVER ROARING BRANCH OF WALLOOMSAC RIVER
BRIDGE No. BR 11
WOODFORD, VT. BENNINGTON COUNTY

	DRAWN BY	DATE
	JTB	02/22
	CHKD BY	
	PCP	03/06
	APPROV BY	
	SUPERVISOR	W. J. GATTI
	Q.A.	

TENSOR 2608

PROJ NO. BHF 010-1(29)
CUSTOMER: RENAUD BROTHERS, INC.

CASCO BAY STEEL STRUCTURES, INC.
75 SPRING HILL ROAD SACO, MAINE 04072
PHONE (207) 282-7360 FAX. (207) 282-1179

JOB NO.	DRG. NO.
290	3
	REV. 1

PCP Mon Mar 27 08:36:01 EST 2006 /users/jobs/2608/3 (Rev1)